Pyure IDx™ System

Air and Surface Purification System

Installation and Operation Manual (IOM)

Pyure
DYNAMIC PROTECTION®

Table of Contents

1. **List of Tables** 2
2. **List of Figures** 2
3. **Scope of this Manual** 3
4. **Important Safety Guidelines** 3
5. **About the Manufacturer** 3
6. **IDx™ System Description** 4
   - 6.1 System Overview 4
   - 6.2 System Components 4
     - 6.2.1 IDI03™ Units 4
     - 6.2.2 Controllers - 6 Unit and 16 Port 4
     - 6.2.3 Remote 'DR' Sensor 4
   - 6.3 Specifications 4
     - 6.3.1 IDI03™ Induct 'BBB' Hydroxyl Generator 4
     - 6.3.2 MVP™ Six Unit IDx Controller [MVPXX29] and [MVPXX30] 4
     - 6.3.3 MVP™ Sixteen Port IDx Controller [MVPXX37] and [MVPXX38] 5
     - 6.3.4 MVP14™ Remote 'DR' Sensor [MVPXX47] 5
   - 6.4 Safety 5
     - 6.4.1 General Precautions 5
     - 6.4.2 Electrical Safety 5
     - 6.4.3 Ultraviolet (UV) Radiation Safety 6
7. **Theory of Operation** 7
8. **Applications** 8
9. **Receiving and Handling** 9
10. **General Installation Information** 10
    - 10.1 Discussion 10
    - 10.2 IDx™ Controllers 11
      - 10.2.1 Electrical Supply 11
      - 10.2.2 Controller Wiring 11
      - 10.2.3 Controller to each IDx™ Unit 11
      - 10.2.4 Controller to Sensor 11
      - 10.2.5 Interlock 11
    - 10.3 IDI03™ Units 12
      - 10.3.1 Standard installation of an IDI unit into ductwork 13
      - 10.3.2 Air Side Requirements 14
      - 10.3.3 Duct Airflow Velocity 14
      - 10.3.4 Duct Bypass 14
      - 10.3.5 Airflow Direction 14
      - 10.3.6 Ambient Humidity Levels 14
    - 10.4 Remote 'DR' Sensor [MVPXXMA47] 14
    - 10.5 Sensor to Remote Sensor Housing 15
11. **Operator Access Controls** 17
    - 11.1 Access Controls 17
    - 11.2 System Activation 17
      - 11.2.1 Activation Code 17
      - 11.2.2 Passwords 17
12. **System Operation** 18
    - 12.1 Start Up 18
    - 12.2 Normal Operation 19
    - 12.3 Start Up Following Power Interruption 20
    - 12.4 Operator Observations 20
    - 12.5 Pre-Shut Down Checks 20
13. **General Cleaning** 21
    - 13.1 Exterior 21
    - 13.2 Controller Enclosure Vents/Filters 21
    - 13.3 Cleaning the IDI™ Optic Chamber and Optics 21
14. **Scheduled Maintenance** 24
    - 14.1 IDx™ System Maintenance Requirements 24
    - 14.2 Important Reminders 25
15. **IDx™ System Troubleshooting Matrix** 26
16. **Appendix A: Operator Accessible Human Machine Interface (HMI) Screens** 27
    - 16.1 General Information 27
    - 16.2 System Activation 27
    - 16.3 User Login Type Definitions 27
    - 16.4 Data Entry 28
    - 16.5 Main Screen 28
      - 16.5.1 Master Control 28
      - 16.5.2 Menu Buttons 28
    - 16.6 About Screen 29
      - 16.6.1 About Information 29
      - 16.6.2 Menu Buttons 29
    - 16.7 Alarm Screen 30
      - 16.7.1 Alarm History 30
    - 16.8 Run Status Screen 30
      - 16.8.1 Run Status Information 30
      - 16.8.2 Menu Buttons 31
    - 16.9 Volatile Organic Compound (VOC) Log Screen 31
      - 16.9.1 VOC Log Information 32
    - 16.10 Usage Setup 32
      - 16.10.1 Usage Setup Information 32
    - 16.11 Remote HMI Access 32
17. **Appendix B: Alarm Codes & Definitions Six Unit Controller** 38

© 2023 The Pyure Company Inc.

18. Appendix C: Alarm Codes & Definitions Sixteen Port Controller 39

19. Appendix D: Technical Documents Six Unit Controller, IDI Unit, Sensor 42

19.1 Six Unit Controller (120V) [MVPXXMA29] 42

19.2 Six Unit Controller (210-240V) [MVPXXMA30] 43

19.3 Sensor [MVPXXMA47] 44

19.4 IDI03™ In-Duct Unit 46

19.5 IDI03™ Mounting Plate [IDIXXMD69] 47

19.6 In-Duct Unit InLine Dynamic Enclosure [IDIXXMA20] 48

19.7 In-Duct Unit (200mm) Interface Plate [IDIXXMA22] 50

19.8 In-Duct Unit (160mm) Interface Plate [IDIXXMA23] 51

19.9 Six Unit Controller Schematic (General) [MVPXXED25] 52

19.10 One IDI03™ Unit Schematic [MVPXXEZI100] 53

19.11 Two IDI03™ Unit Schematic [MVPXXEZI200] 54

19.12 Three IDI03™ Unit Schematic [MVPXXEZI300] 55

19.13 Four IDI03™ Unit Schematic [MVPXXEZI400] 56

19.14 Six Unit Controller with Two Sensors Schematic [MVPXXEZS20] 57

19.15 Six Unit Controller (230V) with Four Sensors Schematic [MVPXXEZS30] 58

19.16 Six Unit Controller with Four Sensors Schematic [MVPXXEZS24] 59

20. Appendix E: Technical Documents Sixteen Port Controller 60

20.1 Sixteen Port Controller (120V) [MVPXXMA370] 60

20.2 Sixteen Port Controller (210-240V) [MVPXXMA380] 61

20.3 Five IDI03™ Unit Schematic [MVPXXEZJ500] 62

20.4 Seven IDI03™ Unit Schematic [MVPXXEZJ700] 63

20.5 Eight IDI03™ Unit Schematic [MVPXXEZJ100] 64

20.6 Sixteen Port Controller (120V & 230V) with Two Sensors Schematic [MVPXXEZS22] 66

20.7 Sixteen Port Controller (120V & 230V) with Four Sensors Schematic [MVPXXESZ40] 67

21. Appendix F: Limited Warranty 68

22. Appendix G: Limited Use End-User License Agreement 69

1. List of Tables

Table 1 – Fault/Service Light Indicators 19

Table 2 – IDx™ System Maintenance Requirements 24

Table 3 – IDx™ System Troubleshooting Matrix 26

Table 4 – Main Screen Menu Buttons 29

Table 5 – About Screen Menu Buttons 29

Table 6 – Run Status Screen Menu Buttons 31

2. List of Figures

Figure 1a – Six Unit Controller Features 18

Figure 1b – Sixteen Port Controller Features 18

Figure 2 – IDI™ Unit quick release screws 22

Figure 3 – Activation Screen 27

Figure 4 – Password Screen 27

Figure 5 – Security Code Entry 28

Figure 6 – Alphanumeric Entry Screen 28

Figure 7 – Main Screen 28

Figure 8 – About Screen 29

Figure 9 – Alarm History Screen 30

Figure 10 – Auto RUN Status Screen - Six Unit 30

Figure 11 - Auto RUN Status Screen - Sixteen Port 30

Figure 12 – VOC Log Screen 31

Figure 13 – Usage Setup Screen 32

Figure 14 – Main Screen 33

Figure 15 – System Screen Notificaation 33

Figure 16 – Main Menu 33

Figure 17 – Setting Menu 33

Figure 18 – IP Address Setting Screen 34

Figure 19 – Internet Browser: Remote Access 35

Figure 20 – Internet Browser:Built-in Ethernet 35

Figure 21 – Internet Browser:Open Saved EXE file 36

Figure 22 – Remote Application Screen: Login 36

Figure 23 – Remote Application Screen: Main Menu 37

© 2023 The Pyure Company Inc.

3. Scope of this Manual

This manual describes the operation and functionality of the Pyure IDx™ System. It is specifically written for personnel responsible for ensuring the safe and proper operation of the equipment.

NOTE: Service should only be provided by a Pyure qualified service technician. Please refer to Section 14 for additional information regarding the maintenance and sustainment of the IDx™ System.

4. Important Safety Guidelines

Throughout this manual, special references are made when conditions warrant an increased level of attention and are of paramount importance to personnel and equipment safety. All warnings, cautions, and notes must be thoroughly reviewed and understood prior to any attempts to operate, service, troubleshoot or repair any part of this equipment. A WARNING, CAUTION or NOTE found in this manual will be illustrated using the following identifiers and definitions:

SIGNIFICANCE	IDENTIFIER	DEFINITION
WARNING	⚠ **WARNING (all associated text will be in ALL CAPS).**	Used to indicate a procedure or operation which, if not executed properly, could result in serious injury or loss of life.
CAUTION	⚠ **CAUTION**	Used to indicate a procedure or operation which, if not executed properly could result in damage to the equipment.
NOTE	**NOTE: The word note and associated text will be in bold and italicized font.**	Used to indicate information deemed essential to emphasize.

5. About the Manufacturer

The Pyure Company Inc.® is a United States corporation (formerly HGI Industries Inc.), whose cutting-edge atmospheric hydroxyl radical generating technology has been at the forefront of high-volume air and surface decontamination for the past 20 years. Company headquarters' research, development, and custom fabrication are located in Boynton Beach, Florida, USA.

© 2023 The Pyure Company Inc.

6. IDx™ System Description

6.1 System Overview

Pyure Dynamic Protection® systems feature sensor driven, interactive process controls. They are scalable to any size and offer significant economies of scale when treating large surface areas. They can be integrated into a single or multiple HVAC /air handling systems, depending on the layout and configuration.

6.2 System Components

6.2.1 IDI03™ Units (see Appendix C: 18.5)

The IDI03™ unit (3-optics) contains Pyure's proprietary hydroxyl generating optics/electronics. Units can be directly installed into an existing HVAC duct system or within their own enclosure as part of a bypass duct or separate duct system. The IDI™ units are wired to the Control Panel, which in turn controls optic function and Pyure's hydroxyl production.

6.2.2 Controller
MVP Six Unit IDx Controllers [MVPXX29/30]
MVP Sixteen Port IDx Controllers [MVPXX37/38]
(see Appendix D & E)

Utilizing Pyure's proprietary software and control logic, the Controller is the control center of the IDx™ system. The Controller are designed to modulate Pyure hydroxyl production based on real-time feedback from sensors in the treatment space, thus maintaining target levels proven to be effective at reducing pathogen, air pollutant, and odor levels. All IDx™ units are directly wired to the Controller, as are the Sensors (up to four Sensors can be connected to each Controller). The main electrical supply is wired to the Controller (see Section 19.10 & 20.3 for wiring instructions).

6.2.3 Remote 'DR' Sensor [MVPXXMA47] (see Appendix C: 18.4)

Pyure's Remote 'DR' Sensor is integral to the IDx™ System and provides constant real-time feedback to the Controller. This data is collected, analysed and utilized by the Controller to make necessary adjustments in hydroxyl production.

6.3 Specifications

6.3.1 00819355021215
IDI03™ Induct
'BBB' Hydroxyl Generator [IDI03]
(Contact Pyure for other non-standard optic configurations)

Dimensions (LxWxD):	13.7" x 10.5" x 11.8" (346 x 266 x 300mm)
Weight:	10.0 lbs (4.5 kg)
Voltage:	100-240VAC @50/60Hz
Power:	126 Watts
Velocity:	Max 1,250 ft/min
Certification:	UL 1598, CSA C22.2 #250, CE, RoHS, REACH

6.3.2 00819355021291
MVP™ Six Unit IDx 120V Controller [MVPXX29]

00819355021307
MVP™ Six Unit IDx 230V Controller [MVPXX30]

Dimensions (LxWxD):	18.0" x 15.0" x 10.0" (458 x 391 x 250mm)
Weight:	25.0 lbs (11.3 kg)
Voltage:	100-120VAC @60Hz /or/ 208-240VAC @50/60Hz
Power:	1200 Watts (Max)

© 2023 The Pyure Company Inc.

6.3.3 00819355022106
MVP™ Sixteen Port IDx 120V Controller [MVPXX37]

00819355022113
MVP™ Sixteen Port IDx 230V Controller [MVPXX38]

Dimensions (LxWxD):	22.1" x 17.4" x 9.9" (560 x 441.8 x 251.53mm)
Weight:	46.0 lbs (20.9 kg)
Voltage:	100-120VAC @60Hz /or/ 208-240VAC @50/60Hz
Power:	1200 Watts (Max)

6.3.4 00819355021314
MVP14™ Remote 'DR' Sensor [MVPXX47]

Dimensions (LxWxD):	14.7" x 7.9" x 16.0" (372 x 200 x 407mm)
Weight:	12.0 lbs (5.4 kg)
Voltage:	24VDC
Power:	2 Watts (max)

6.4 Safety

6.4.1 General Precautions

Pyure Technology™ produces the same concentrations of hydroxyls and organic oxidants that are naturally present in our outdoor environment. Following Pyure's operating guidelines ensures safe application of the system. Operating personnel should be aware of equipment safety items and procedures while servicing equipment.

⚠ **CAUTION: Maintenance is performed by Pyure qualified technicians.**

NOTE: Any damage to equipment resulting from unauthorized maintenance practices or actions taken by personnel that have NOT been qualified by The Pyure Company may nullify and void existing manufacturer warranties.

NOTE: Pyure engineers routinely customize the IDx™ hardware and software configurations in order to meet the customer's air purification requirements. Accessing internal components by unauthorized personnel could result in a diminished operating capacity.

Qualified technicians performing maintenance on the IDx™ system must observe all safety and personal protective equipment [PPE] rules for the particular site they are working in. All operating, maintenance, and repair personnel must read and follow local operation procedures to ensure personal safety and prevent unintended equipment damage.

All personnel operating and servicing the IDI systems shall become thoroughly familiar with and frequently review the general, electrical and UV safety precautions. These precautions are in addition to the specific warnings and cautions noted throughout this manual and maintenance procedures.

6.4.2 Electrical Safety

⚠ **WARNING: Service on electrical components must be conducted by a verifiably trained and certified electrician and standard Lockout/Tagout [LOTO] procedures must be followed.**

The IDx™ system operates on a 120/230 Volt (depending on the model), 50/60 cycle, circuit. Control logic between the Control Panel and the Sensor Panels is 24 Volt DC. The 24V DC control circuit is backed up by an integrated, uninterruptable power supply [UPS]. The UPS only supplies power to the PLC, control circuits, and sensor panels. In the event of a main power interruption the user interface screen will allow control of the unit, or control can be done remotely (See Section 16.11). Depending on the UPS, backup power should be available for approximately 15 to 30 minutes.

Contact The Pyure Company for technician training on 877-735-3701.

© 2023 The Pyure Company Inc.

Controllers have no user/operator-serviceable parts. Operators should however be aware of any potential electrical hazards such as loose wiring or other electrical systems in the vicinity of the unit.

6.4.3 Ultraviolet (UV) Radiation Safety

Operators should be aware of any UV light energy escaping from inside the IDI™ optic chamber. The precautions in this section are provided for when UV energy is known to be escaping from within the enclosure, or when operator personnel may be assisting servicing personnel.

⚠ **WARNING: Damaged seals around IDI™ UNITS, impacts to the ENCLOSURE or misalignment of the DUCT could result in the inadvertent seepage of UV energy into the immediate vicinity of the unit.**

⚠ **WARNING: Direct UV energy is known to cause serious burns to exposed skin and eyes.**

⚠ **WARNING: Exposed skin must be protected when working with direct UV energy. All personnel working in the vicinity of exposed UV energy must wear long sleeves and face shields that protect against UVC energy.**

[2]Pyure Technical Services can be reached by calling The Pyure Company's main office in Boynton Beach, Florida, at 877-735-3701.

© 2023 The Pyure Company Inc.

7. Theory of Operation

Nature's Process Outdoors

Sunlight produces hydroxyls & organic oxidants

- Airborne hydroxyls are ideal sanitizing agents.
- Atmospheric hydroxyls are continuously produced by the action of the sun's ultraviolet energy on oxygen and water in our atmosphere.
- Hydroxyls react with a broader range of chemicals and are a million times more reactive than ozone.
- Hydroxyls react so fast that they are consumed within a few milliseconds and never accumulate.
- Hydroxyls react with volatile organic compounds (VOC) and produce organic oxidants, which also sanitize but are not as reactive, so they exist longer than hydroxyls.
- Hydroxyls and organic oxidants keep the air outside safe to breathe by decomposing natural and man-made pollutants and pathogens.

Indoors with Pyure Dynamic Protection®

Pyure produces the same concentrations of hydroxyls & organic oxidants as the sun generates outdoors

- Pyure Technology produces the same concentrations of hydroxyls and natural oxidants indoors as are found in nature.
- By replicating the levels found outdoors, Pyure ensures safety and efficacy.
- Hydroxyls are a natural oxidant and the most important cleansing agent in our outdoor environment.
- Hydroxyls do not exist naturally indoors – they are consumed within milliseconds when produced by sunlight.

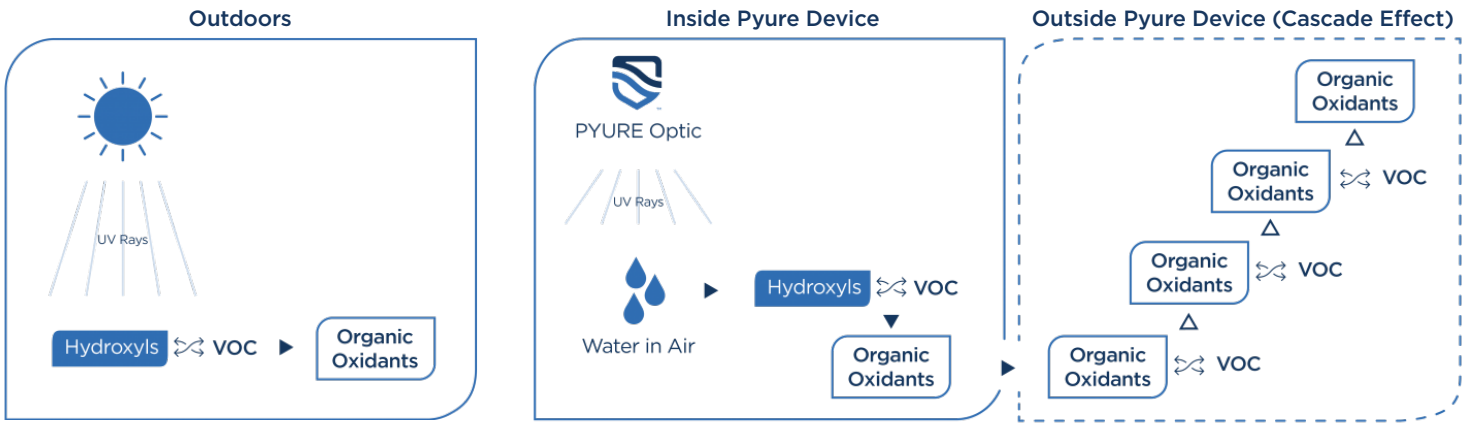

© 2023 The Pyure Company Inc.

8. Applications

Pyure Dynamic Protection® IDx™ systems feature sensor driven, interactive process controls. They are scalable to any size and offer significant economies of scale when treating large surface areas. They can be integrated into a single or multiple HVAC / air handling systems, depending on the layout and configuration.

The IDI™ series units can be used in medical, senior living, office, retail and other commercial, scholastic or hospitality use. It is equipped with three hydroxyl generating optics, designed for continuous operation when inserted in a duct and operates using less than 126 Watts (refer to Section 6.3 for additional ratings).

© 2023 The Pyure Company Inc.

9. Receiving and Handling

⚠ CAUTION

This product is fragile and contains glass parts. Packing box is 16.0˝x 16.0˝x 16.0˝(406 mm x 406 mm x 406 mm) cubed, which can be palletized with a 6 x 3 configuration (18 per pallet).

Extreme caution must be taken by forklift. When removing from pallet, ensure that the shrink wrap is not tethered to any boxes.

Carefully unstack from pallet, starting at the top.

DO NOT use a knife along the top of the box when opening.

Open from the side and tear back the tape.

There is a sheet metal panel along the inside of the box which, has sharp edges underneath the packaging.

Please be careful as you remove the paper cushioning inside the box.

Pull the product from the main box using the handle and place it on a flat surface. Remove from the inner box, and carefully remove the plastic covering.

Gently pull the foam packing out from between each optic.

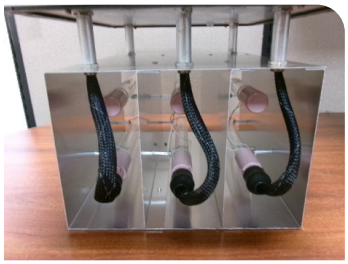

Use protective gloves when handling optics for safety and to avoid fingerprints on optics. Ensure that all optic cables are secure onto optic lamp connectors. **(No packaging material can be left inside the optic chamber).**

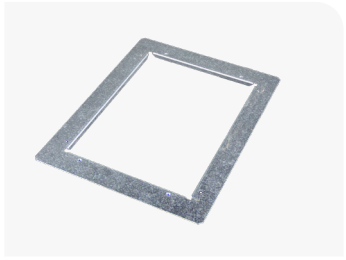

A Pyure IDI Mounting Plate is included with each IDI unit. The Mounting Plate is used to create a rigid opening to support the IDI unit when installed directly into the duct.

The product is now ready for installation.

© 2023 The Pyure Company Inc.

10. General Installation Information

10.1 Discussion

Pyure's IDx™ system has been designed and installed based on specific applications. For fixed installations, the equipment, clearances, environmental conditions, and operating parameters have been determined and are part of the license to operate the system. Any changes in the operating environment, including, but not limited to, chemical usage, volume of treated area, air flow changes, product types, operating profile, etc., need to be re-evaluated with respect to the system design and operation. (Installation should be done by a qualified service technician).

Important
Qualified personnel: Please refer to all related electrical schematics. (Appendicies D & E)

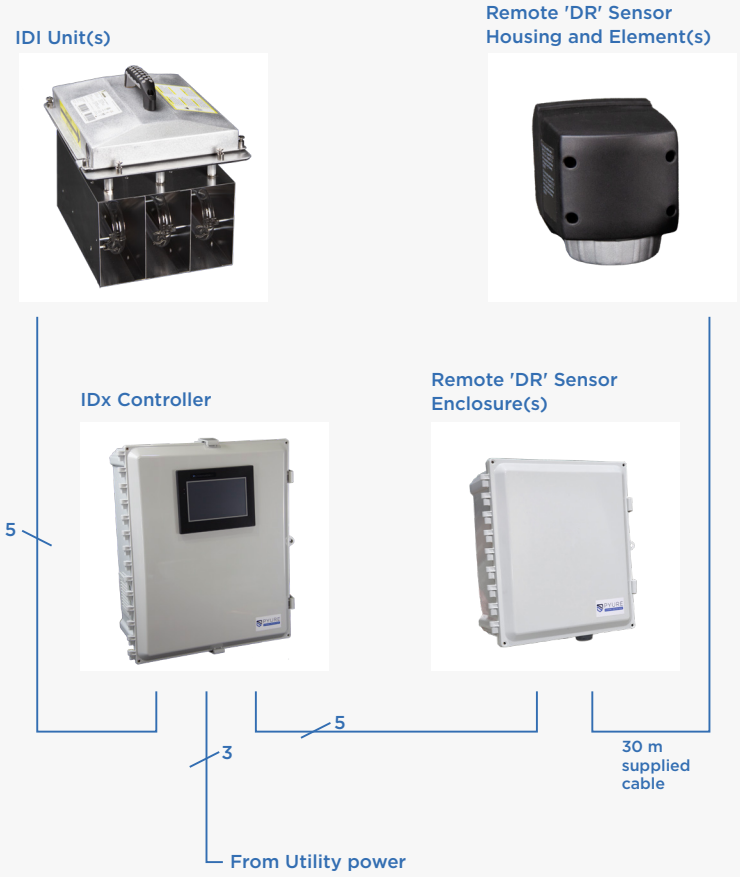

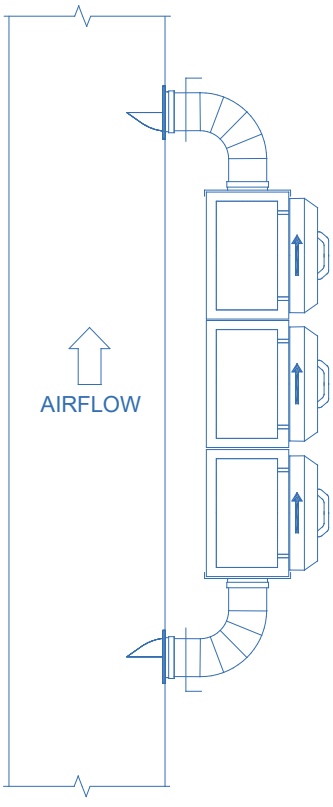

Bypass duct sample configuration

© 2023 The Pyure Company Inc.

10.2 IDx™ Controller

The IDx™ Controller is typically installed near the IDI03™ Units being controlled, in an easily accessible location and at good working height for Human Machine Interface (HMI)/touch screen function (usually 54”– 60” (1371.6mm – 1524mm) to the center of the panel).

The main electrical supply for the IDx™ System is wired to the Controller (see Section 19.10 & 20.3). Electrical supply for the IDI™ Units is provided by the Controller (see Section 19.10 & 20.3). Remote 'DR' Sensors [MVPXXMA47] are also supplied with electrical power (24VDC) from the Controller (see Section 19.14 & 20.6).

Parts included for installation options:

Controller Enclosure

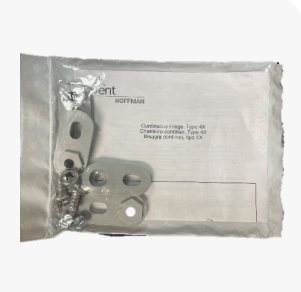

Controller Mounting Brackets (x4)

Controller Relays
24VAC (x1),
24VDC (x1),
120VAC (x1),
220-240VAC (x1)

10.2.1 Electrical Supply (see Appendix C: 18.10)

Each IDx™ Controller requires one dedicated electrical supply:

[MVPXXMA25/29] and [MVPXX37]:	120VAC, 60Hz (1,200W max), L1/Neutral/Ground
[MVPXXMA25/30] and [MVPXX38]:	210-240VAC, 50/60Hz (1,200W max), L1/L2/Ground

10.2.2 Controller Wiring (see Appendix B: 18.10)

10.2.3 Controller to each IDx™ Unit

IDI03™ Units:	4 Conductors + Ground (100-240VAC, 50/60Hz, 270W max. each)

10.2.4 Controller to Sensor Panel (see Appendix B: 18.15)

To each Sensor Panel:	4 Conductors + Ground (24VDC, 50mW). Use: 18 AWG min up to 100 ft 16 AWG min 101-150 ft 14 AWG min 151-200 ft

10.2.5 Interlock

The IDI™ units must be interlocked with the HVAC fan where they are installed. This will ensure that when the HVAC fan is off, the IDI™ units will also be turned off. When the HVAC fan is on, the IDI™ units will be enabled.

To complete this interlock, a control voltage signal must be made to the corresponding terminal blocks in the MVP™ IDx™ Controller. This control signal can be either 24V (AC or DC), 120VAC or 208-240VAC depending on controller model and available voltage source.* The interlock signal can come from the relevant HVAC unit controller, or when that is not practical, from a local airflow device (pressure differential switch, sail switch, etc.).

*Note: All wiring to be carried out according to local electrical code requirements.

© 2023 The Pyure Company Inc.

10.3 IDI03™ Units

Pyure's IDI03™ series of in-duct units are designed to be installed in specific locations of HVAC systems, providing optimal treatment of the coverage areas.

The minimum duct size is 12" wide by 10" deep (305 mm x 254 mm).

In situations where the duct is not large enough, or if the air velocity is >1,250 ft/min (see Section 10.3.4). Pyure recommends installing a short bypass duct. An optional IDI In-Line Dynamic enclosure (see Section 10.3 - 10.3.6) makes this bypass very simple with either 6.0" or 8.0" (160mm or 200mm) round duct. The bypass simply allows a portion of the supply air to be directed through the IDI™ Unit while having little to no effect on the main duct airflow.

A Pyure IDI Mounting Plate is included with each IDI unit. The Mounting Plate is used to create a rigid opening to support the IDI unit when installed directly into the duct.

The IDI™ Unit receives electrical power from the main Controller (see Section 19.10 & 20.3).

© 2023 The Pyure Company Inc.

10.3.1 Standard installation of an IDI unit into ductwork.

Watch how to install an IDI here:

Or follow these ten steps:

1. Remove the IDI and mounting flange from its packaging.
2. The IDI comes fully assembled and ready for installation.
3. In addition to the included flange, you will need foam gasketing and appropriate hardware to install the flange on your duct. In this example, we will be using 3/8" black foam gasket and Phillips head screws with integrated washers.
4. Mark the access hole for the unit by placing the mounting flange on your duct with the bends facing upwards. Make sure to mark the 4 corners outside the bends and connect them with a straight edge. Marking in front of the bends will cause the hole to be too small and the flange will not properly fit inside the hole.
5. Using the metal cutting tool of your choice and the appropriate PPE, cut the access hole for the unit. Optionally, use a file or sander to break the sharp edges of the hole.
6. Place the flange over the hole with the bends facing downward into the duct. Mark and drill the 4 clearance holes to ¼" diameter.
7. Apply foam gasketing to the bottom of the mounting flange just outside the perimeter of the holes. Make sure to create a snug fit where the foam meets itself to create a good seal and avoid "whistling."
8. Place the flange in position with the foam facing inwards and the clearance holes lined up. Temporarily slide the unit into place so the exposed screws protrude through the clearance holes. Mark locations around the perimeter of the flange, which will be used to secure it using the hardware you have chosen. Remove the unit and prep the hole locations for drilling.
9. Drill the prepped hole locations to the appropriate diameter for the hardware you have chosen. Secure the flange with the hardware, ensuring a tight fit around the full perimeter. Ensure not to use the pre-drilled clearance holes when mounting the flange.
10. Prep the unit for final installation by removing the foam cushioning inside the optic chamber. Check to ensure the optics are plugged in, and the optic harnesses are not sticking out to avoid pinching. Confirm the orientation of the unit as you install, so the airflow direction arrow is facing the direction of airflow in the duct. Slide the unit into place, and secure with the 4 flathead screws on the sides perpendicular to the airflow arrows. Note that the 4 screws on the same sides of the airflow arrows are used to secure the cap to the top of the unit and should not be tightened or loosened during mechanical installation.

© 2023 The Pyure Company Inc.

10.3.2 Air Side Requirements

10.3.3 Duct Airflow Velocity

Pyure recommends installation of the IDI™ unit in an HVAC duct with a minimum velocity of 50 feet per minute and a maximum velocity of 1,250 feet per minute. With velocities in excess of the maximum recommended, please see the option for duct bypass.

10.3.4 Duct Bypass

Pyure recommends the installation of a duct bypass when air velocity exceeds 1,250 feet per minute. The duct bypass consists of one IDI™ In-Line Dynamic Box (per IDI™ unit), two IDI™ Interface Plates (with either 160mm or 200mm openings), and the associated ducting/collars/rings (supplied by others) to complete the installation. Pyure also recommends the installation of two shut-off dampers, one before and one after the IDI™ unit/s, which allows for isolation during service and maintenance.

The HVAC duct takeoffs for the duct bypass should include a scoop, one to force air through the bypass and the other to create additional suction through the bypass. Many duct takeoffs include both a scoop and damper, which will simplify the recommended requirements.

10.3.5 Airflow Direction

The IDI™ units must be installed in the correct orientation regarding airflow. Note the arrow indicators on both sides of the unit and ensure that the final placement is in the same direction as the actual airflow.

10.3.6 Ambient Humidity Levels

Pyure recommends 15 - 95% relative humidity for optimal performance.

10.4 Remote 'DR' Sensor [MVPXXMA47]

The IDx™ System requires a minimum of one Sensor per Controller and can accept up to four Sensors (the number and placement of sensors is determined by Pyure's technical team and Pyure qualified representative prior to installation).

A Sensor consists of a main enclosure, one remote sensor factory cable (up to 98.43ft. (30m) length) and one remote sensor base station complete with sensor element. The main enclosure should be installed in an easily accessible location and wired to the corresponding Controller. The remote sensor base station/sensor is installed as per a Pyure qualified representative's direction and the remote sensor factory cable connects it back to the main sensor enclosure (installed to local electrical code requirements).

Parts included for installation:

Sensor Enclosure

Sensor Cable (x1)

Sensor Storage Container

Sensor Element

Sensor Housing (x1)

Mounting Brackets (x4)

Wire Grommet (x1)

© 2023 The Pyure Company Inc.

10.5 Sensor Panel to Remote Sensor Housing

One factory-terminated low voltage cable (supplied with the IDx™ System) needs to be installed between the Sensor Enclosure and the Remote Sensor Housing. The ‘large’ connector end remains inside the Sensor Enclosure, while the ‘small’ connector end is routed through the large strain-relief connector at the bottom of the Sensor Enclosure. The ‘large’ connector plugs into the Sensor Display Module inside the Sensor Panel. **Caution is required as the pins in the connector base are easily damaged/bent if installed incorrectly.** The connector plugs into the Display Module in one direction only.

The small connector end/cable can then be routed through to the Remote Sensor Housing and plugged into the side port (connector plugs into the base in one direction only). The final step is installing the Sensor (supplied with the IDx™ System) into the Remote Sensor Housing. **Caution is required as the pins in the Sensor base are easily damaged/bent if installed incorrectly.** The Sensor plugs into the Remote Sensor Housing in one direction only.

© 2023 The Pyure Company Inc.

Control Panel (L)
Sensor Panel (R)

Mounting the Control Panel and Sensor Panel:

Use the included hardware from each enclosure for a vertical installation. First, secure the brackets to the back of the Control Panel and Sensor Panel enclosures, then secure both panels to a firm structure capable of sustaining the weight.

Installing the Sensor Panel:

Important -
Ensure that you feed the small end of the sensor cable from the inside of the enclosure first. Push and pull the entire length through the cable gland, leaving enough length for a service loop.

1. Fit the cable grommet around sensor cable and loosely secure the cable gland.

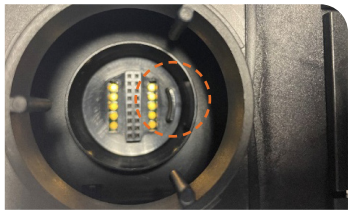

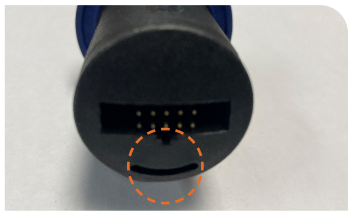

2. On both sensor connectors, ensure that the curved tab inside the housings locate exactly into the corresponding aperture.

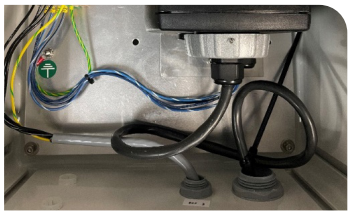

3. Introduce a service loop in the sensor cable which will also provide extra strain relief. Next, firmly secure cable gland.

4. Once the sensor bracket has been secured to an upright sturdy structure, angle the base of the sensor downwards to the back of the bracket and push down until there is a click and positive alignment.

To remove the sensor, push down on the front tab and pull upwards.

5. Ensure that you align the tab on the cable connector with the sensor housing connection groove. Gently screw into place (do not overtighten).

© 2023 The Pyure Company Inc.

11. Operator Access Controls

11.1 Access Controls

The IDx™ system functionality is controlled through a touch screen display/Human Machine Interface (HMI) located on the front of the Controller. Through this interface screen, the user can access system-level menus.

NOTE: Appendix (A) provides detailed description of the menu items and operator actions available through the Control Subsystem's user interface.

11.2 System Activation

Prior to initially operating the Controller, the operator must have:

1. Current system activation code.
2. Valid password code for the system-level functions being accessed.

11.2.1 Activation Code

The organization that has procured or leased the system will be issued an activation code that is valid for a specific period from the date of activation. The activation code provides authorization for the organization to operate the IDx™ system under the terms and conditions of the licensing agreement. The licensing agreement and associated activation code must be renewed periodically based on the initial terms of the license. The Controller will automatically be deactivated if the activation code and associated licensing agreement expires.

NOTE: Activation codes enabling IDx™ Controller operations are valid for a specific period of time from the time of activation. Activation codes must be renewed periodically (usually annually) to prevent system deactivation and ensure continued operations.

11.2.2 Passwords

A password system is used to control access to controller functions. There are several levels of functions for which passwords are assigned. These include:

Supervisor – this is intended to be for the person who has a need to access the most functionality available.

Maintenance – this allows in-house and contractor-qualified Pyure field service technicians to view and change maintenance and troubleshooting screens.

Operator – this includes multiple operator password fields so multiple operators can access the controller. Screens that are available to operators have limited functions and are intended to provide the ability for operators to view current status of the operational components of the system.

General/Default – this is a minimum level of controller access. It allows general users to view status screens and to perform very limited control functions.

NOTE: Passwords are used to establish system-level access privileges and are intended to prevent inadvertent actions which could diminish the IDx™ systems intended operations.

© 2023 The Pyure Company Inc.

12. System Operation

12.1 Start Up

Once the system has been activated the system can be operated. Start-up of IDx™ system shall only be accomplished by trained operators. The Figures below show the Access Control/Human Machine Interface (HMI) screen and other key features on the Controllers' exterior.

Figure 1a: Six Unit Controller Features

Figure 1b: Sixteen Port Controller Features

Standard start up and commissioning steps will include the following:

1. Visually check general conditions of IDx™ System.
2. Confirm incoming power is available. The Access Control Screen on the Controller should be illuminated when power is available. If power is not available, check to ensure the Main Power Switch is in the ON position and the breaker providing electrical power to the Controller is ON (Reset).
3. Start the Controller at the Access Control Screen by selecting the "Master Cntrl" icon (see Section 16.5).
4. Confirm that the IDx™ Units are energized and working properly by observing the Auto Mode Screen (see Section 16.8) and noting the green processing status light is lit.
5. Note any alarm codes on the Access Control Screen and note that the fault and service lights (amber/red) on the Controller are not lit. Notify servicing personnel in the event of any indicated faults or errors.
6. It is normal for the sensor(s) to go into a calibrate mode anytime power is cycled off/on. This calibrate sequence may last anywhere from a few minutes to several hours depending on several parameters and it is normal for the IDx™ Units to not be functioning during this time. Ensuring this calibrate mode completes and sensor(s) feedback resumes normal operation is an essential part of system commissioning.

© 2023 The Pyure Company Inc.

12.2 Normal Operation

Under normal operating conditions, the IDx™ System will run with little or no operator adjustments. Indications of proper operation include the green processing status light being illuminated on the System Status Lights, no alarm codes noted on the bottom of the Access Control Screen and the optic banks operating within specified limits.

The Control Subsystem continually monitors the IDx™ System status and updates system-level logs accordingly. Operators are alerted to errors, faults, or service conditions by the following:

1. Illumination of the associated Fault/Service indicator light on the System Status Lights. (Six Unit Controller only)
2. List of alarm codes on the Access Control Screen corresponding to the alarm condition(s).

INDICATOR LAMP	INDICATION
Fault (Red)	Indicates that the control system has detected an error. The specific error(s) will be displayed at the bottom of the HMI screen and also recorded in the Alarm/Message Log.
Service (Amber/Yellow)	Indicates that the control system has detected a "Warning" condition. The specific warning(s) will be displayed on the bottom line of the HMI screen.
Processing (Green)	Indicates that the control system is running normally (no faults or servicing requirements detected).

Table 1: Fault/Service Light Indicators - Six Unit Controller Only

NOTE: Appendix A provides information on the screens available to the operator for viewing on the HMI panel.

© 2023 The Pyure Company Inc.

12.3 Start Up following Power Interruption

When power is interrupted to the Controller, the IDx™ Units will be shut down. When the optics are de-energized there will be no atmospheric hydroxyl radicals produced. For critical applications, an alternate/backup power source should be part of the system design and installation. This solution should be capable of operating the entire IDx™ System in the event of a main power disruption or outage.

The Controller has an integrated uninterruptable power supply [UPS]. This UPS will continue to provide power to the sensor(s) and important Controller functions so that sensor calibration will not be lost during temporary power outages. The UPS should provide between 15 and 30 minutes of backup power.

If power is interrupted and restored within the time period that the UPS supplies adequate power, the optics will be reenergized when normal electrical power is restored. Under these circumstances the IDx™ system will be back to normal operation when power is restored.

If power is interrupted and not restored within the time period that the UPS supplies adequate backup power, the sensor(s) will shut down. Once commercial power is restored, the sensor(s) will go into a warm up period where the optic remains de-energized. Control based on sensor feedback will not be functional until the sensor(s) are recalibrated. Upon restart of the system, the operator should follow the startup steps in Section 12.1 to confirm proper operation.

12.4 Operator Observations

Operators should check the Access Control Screen and Status Indicator Lights periodically to note status of operating equipment. Operator observations include the following:

- Alarm status codes and indicator lights.
- Variations in the oxidant sensor readings and optic banks.
- Observable physical status of equipment.

Indications of alarms will be on the bottom of the Main Screen or accessible through the Alarm History menu button on the right side of the Main Screen. The operator should then note the alarm code(s), date and time of the alarm code(s) and the description (alarm details found by pressing the Details button on the bottom of the Alarm Summary Screen. These should be provided to the qualified servicing technician.

NOTE: Appendix B & C provide a table of alarm codes and definitions. User screens are customizable to specific customers and not all screens are available to operators.

The hour meter totals per optic or optic set can be checked by pressing the Usage Setup button from the Main Screen. The total run time per optic, or optic set, will be displayed. The hour meter provides current totals in hours and minutes.

12.5 Pre-Shut Down Checks

It is a good practice to take a minute to check the status of the equipment prior to powering down the IDx™ System. This is done by checking the Status Indicator Lights and looking for alarm indications on the Main Screen.

The IDx™ System is powered down by selecting the Master Control button on the Main Screen. This will maintain power to the Controller for sensor calibration, but will shut off the IDx™ Units.

⚠ **Warning: This will not be considered a Lock Out/Tag Out (LOTO) stage because there will be live power in the controller. If power needs to be completely shut off for any reason, follow your organization's procedures for doing so.**

The Controller main power shut off can be operated to de-energize the Controller and all functions including the sensor unit(s). This should only be done for servicing by qualified technicians, in the event of an emergency or extended shut down of the unit.

© 2023 The Pyure Company Inc.

13. General Cleaning

This section provides procedural guidance on how to clean the IDx™ System. It also covers how to visually inspect the vents located in the Controller. These procedures are intended to be performed on a recurring basis to ensure proper operation of the IDx™ equipment. The periodicity of these procedures will be dictated by the environmental conditions where the equipment resides and minimum recurrence intervals should be determined during the system configuration process.

NOTE: Recurrence intervals may be modified over time based on operating conditions and experience gained utilizing the system.

⚠ **CAUTION: Due to the sensitive nature of the equipment housed inside the IDx™ System, the following procedures should be followed precisely and with extreme care.**

13.1 Exterior

The exterior of the IDx™ System components may be cleaned using non-abrasive soap and water. In highly contaminated/greasy environments, a suitable degreaser may be applied first, and then removed with soap and water.

⚠ **CAUTION: Under no circumstances shall the equipment be hosed down with high pressure water or steam at any pressure.**

13.2 Controller Enclosure Vents/Filters

The Controller Enclosure has one vent on each side. These vents should remain clean and un-blocked. If filters are installed in these vents they should be checked and cleaned when necessary.

13.3 Cleaning the IDI™ Optic Chamber and Optics

⚠ **CAUTION: The optics are very fragile. Extreme care must be used when working on the IDI™ Unit while the optics are exposed.**

⚠ **CAUTION: The approved cleansing solution for cleaning interior components of the Optics Subsystem is: 90% distilled water + 10% isopropyl alcohol. The solution shall be applied using lint-free wipes while wearing latex gloves.**

⚠ **CAUTION: Wear protective eye wear and latex gloves when handling optics.**

© 2023 The Pyure Company Inc.

The steps listed below are used to access and clean the Optic Chamber and Optics.

1. De-energize the IDx™ System
    a. From the Main Screen, select Master Control ‘On’ icon (this de-activates the IDI™ Units). The ‘On’ icon will change to ‘Off’.
    b. If a local disconnect is installed on the electrical supply to the IDI™ Unit, turn to the Off position. If a local disconnect is not available, turn the Main Power Switch on the Control Panel to the Off position. **NOTE: When the Main Power Switch has been deactivated, power is no longer available to any of the unit’s subsystems. Provided the internal uninterruptable power supply (UPS) is fully charged, backup power will be supplied to the sensors for 15-30 minutes. If this procedure is completed prior to the UPS batteries being depleted, the sensors and controller may not require recalibration.**
    c. Apply lock out/tag out (LOTO) markers in accordance with the host facility LOTO guidelines.
2. Depending on the installation, the associated HVAC unit may need to be shut down. Refer to host facility guidelines prior to removing the IDI™ Unit from the duct.
3. Follow host facility protocol to confirm IDI™ Unit is de-energized and safe to work on.
4. Remove four quick release screws holding IDI™ Unit to duct or enclosure (see Figure 2).

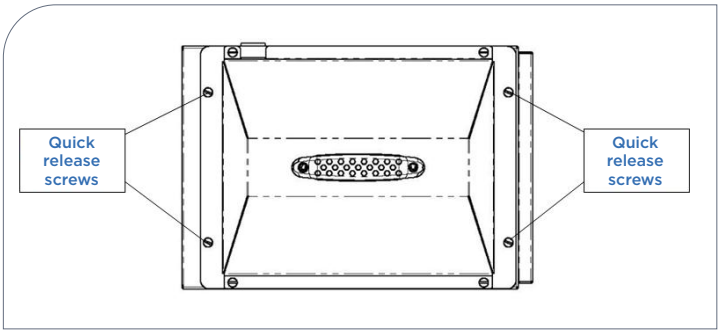

Figure 2: IDI™ Unit quick release screws

5. Carefully pull the IDI™ Unit from the duct/ enclosure and have someone support the unit while work is carried out (or place the unit on a support surface if the electrical service loop is long enough).
6. Remove existing optics following these instructions (using protective eye wear and latex gloves):
    a. With a firm grip on the upper porcelain end of the optic, use your other hand to grip the optic connector.
    b. Gently move the connector back and forth while pulling from the optic base.
    c. Gently pull optic from three lamp supports **(do not put any pressure on the side of the optic without support)**.

© 2023 The Pyure Company Inc.

7. Clean the optic chamber using the approved cleansing solution (see cleansing solution CAUTION note above), lint-free wipes and latex gloves.
8. If re-installing optics, ensure they are cleaned using the approved cleansing solution, lint-free wipes and latex gloves.
9. Install clean or new optics following these instructions:
    a. Remove new optic from packaging and gently insert into the three optic clips.
    b. With a firm grip on the upper porcelain end of the optic, use your other hand to grip the optic connector.
    c. Gently connect the optic connector to the optic. **Note: Optic connector is keyed with the optic base and will connect in one direction only.**
    d. Ensure optic connector and optic base are firmly pressed together.
10. Reinstall the IDI™ Unit in the duct/enclosure and install quick release screws (see Figure 2).
11. Remove LOTO markers and re-engage the Main Power Switch (if local disconnect was turned off, turn back to on position).
12. Using the Access Control Screen, press the Master Control 'Off' icon (restores power to Subsystems and icon changes to green and reads On).
13. From the Auto Screen (see Figure 10), verify that optics are energized (Set number should be bright green and Current (A) should be registering amps being drawn by energized optics.)
14. Return to the Main Screen and ensure the following:
    a. The Master Control 'On' icon is green.
    b. No alarms are displayed relative to the Optics Subsystem.
    c. The green status light on the front of the Controller is illuminated.
    d. The Sensor PPM reading is updating.
15. Document actions using locally established service records.

END OF PROCEDURE

© 2023 The Pyure Company Inc.

14. Scheduled Maintenance

14.1 IDx™ System Maintenance Requirements

ITEM DESCRIPTION	PART #	QTY PER SYSTEM	FREQUENCY
U-Optic – Brown	OPT-XX-078	3 Per IDI	Annual
U-Optic – White	OPT-XX-177	3 Per IDI	Annual
U-Optic - Blue	OPT-XX-176	3 Per IDI	Annual
Sensor Element	ESN-XX-359	1 Per Sensor	Annual
Hydroxyl Optic Generator	XSA00MA360	3 Per IDI	As Needed / On Failure
Renew Software License	N/A	1 Per Controller	Annual
Clean Optic Chamber	N/A	1 Per IDI	As Needed / Check Annually

Table 2: IDx™ System Maintenance Requirements

Annual Activities:

1. **Optic Replacement:** Each IDI™ unit must be removed from the ductwork, its 3 optics removed and replaced with 3 new optics of matching color connectors.
2. **Sensor Element Replacement:** Each sensor features a wall mounted base station with inserted sensor element. This element must be removed and replaced with new.
3. **Software Licensing:** Each Controller remains active for approximately a 12-month period and then goes into a software lock, awaiting service. New codes are provided during service for input to reactivate the Controller for another calendar year.
4. **Optic Chamber Cleaning:** During annual service while changing optics, the cleanliness of the optic chamber should be inspected for cleanliness. If excessive dust or other contaminants are present, it should be wiped down with a cloth and the recommended cleansing solution.

As Needed Activities:

1. **Hydroxyl Optic Generator Replacement:** Each optic is driven by a Hydroxyl Optic Generator unit. These units' lifetime depends on the working environment and frequency of unit power cycles. They are replaced as needed on failure, which is typically multiple years into the lifetime of the system.

© 2023 The Pyure Company Inc.

14.2 Important Reminders

⚠ **CAUTION: Only qualified technicians are authorized to remove access panels to perform component-level maintenance on the IDI system.**

NOTE: Any damage to equipment resulting from unauthorized maintenance practices or by actions taken by personnel that have NOT been qualified by Pyure may nullify and void existing manufacturer warrantees.

NOTE: Pyure engineers routinely customize the IDI system hardware and software configurations in order to meet the customer's specific air purification requirements. Accessing internal components by unauthorized personnel could result in a diminished operating capacity.

Only Pyure qualified service technicians are authorized to perform maintenance tasks on these units.

Note that for coordination with maintenance activities, periodic maintenance tasks may be weekly, monthly, quarterly or some other interval.

The periodicity of these tasks depends on the operating environment and will be initiated at the time the system is specified and commissioned. As operating experience is gained, the periodicity may be adjusted based on system performance and operating conditions.

© 2023 The Pyure Company Inc.

15. IDx™ System Troubleshooting Matrix

ALARM	DESCRIPTION	RESULTING EFFECTS	TROUBLESHOOTING STEPS
CH#(X) Optic Life Exceeds Set Value	The specified channel has surpassed its expected life based on hours of run time accrued.	No triggered effects, notification alarm only.	Replace optic(s) and reset specified channels optic life back to zero hours. **(Requires qualified technician).**
CH#(X)/CH#(X) – OPTIC CURRENT BELOW SET PT OR CH#(X) – OPTIC CURRENT LEVEL BELOW SET PT	The specified channel(s) are ON but the current draw is below the expected minimum value for the number of optics on the channel(s).	No triggered effects, notification alarm only.	If IDX controller enable relay is wired to HVAC system – confirm HVAC system is ON, blower is ON, and no dampers are isolating Pyure IDI units.
			Confirm which IDI unit(s) may be affected and identify if any optics on the channel are not currently ON. Replace these optic(s) with new. **(Requires qualified technician).**
			If previous step does not result in optic function, replace Hydroxy Generator Unit for failing optic in IDI head. **(Requires qualified technician).**
LICENSE IS ABOUT TO EXPIRE	Software license is approaching expiration date.	No triggered effects, notification alarm only.	Contact Pyure to order annual maintenance parts and schedule service.
LICENSE EXPIRED	Software license has exceeded expiration date.	Pyure system rendered inactive. Sensors will continue to monitor, and controller will log data, optics will not function.	Contact Pyure to order annual maintenance parts receive a new activation code and optionally schedule service with Pyure.
ZONE (X): Disabled due to Sensor(s)	There is an issue with the minimum number of sensors required to operate the specified zone.	The specified zone is disabled.	Confirm sensor(s) function with sensor troubleshooting steps.
SENSOR #(X): Calibrating /or/ IN Error	There is an issue with the specified sensor which needs to be identified at the sensor enclosure.	No direct effects. A zone may be disabled depending on the number of sensors per zone.	Confirm sensor monitor inside enclosure does not have a “Sensor ready in XX:XX.” If so, wait for countdown to complete and sensor will return to normal.
			If sensor is reading a numbered value and alarm persists, confirm wiring between sensor enclosure and controller and/or contact Pyure for assistance.
			If sensor enclosure is equipped with blue conditioning module, confirm module power light is blinking, if not, contact Pyure for repairs.
Refer to Appendix A for Alarm Codes and Definitions			

Table 3: IDx™ System Troubleshooting Matrix

© 2023 The Pyure Company Inc.

16. Appendix A: Operator Accessible Human Machine Interface (HMI) Screens

16.1 General Information

The touch screen located on the front of the IDx™ Control Panel is the primary user interface for operations and control of the system. This appendix will describe the various menu items and associated displays. Additional questions regarding the operator interface should be addressed to The Pyure Company.

16.2 System Activation

Prior to normal operations, the software control subsystem must be activated. This should be accomplished by a qualified technician during the initial installation, checkout and configuring of the system.

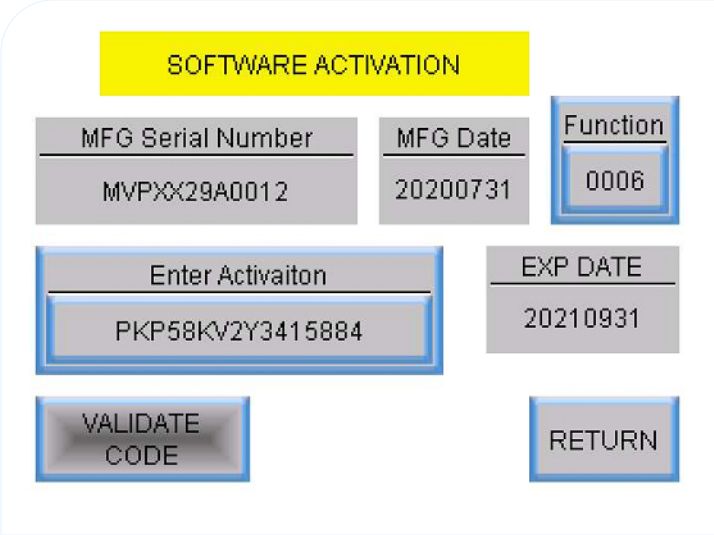

Figure 3: Activation Screen

16.3 User Access Type Definitions

Users are assigned passwords (consisting of up to 8 numerical digits) in order to access the various menu items from the MAIN display screen. The passwords are assigned via the ABOUT->ACCESS CONTROLS menu selection to arrive at the PASSWORD CONTROL screen.

It is important to remember that access to certain menu items and display screens are restricted based on the type of user. The user types are:

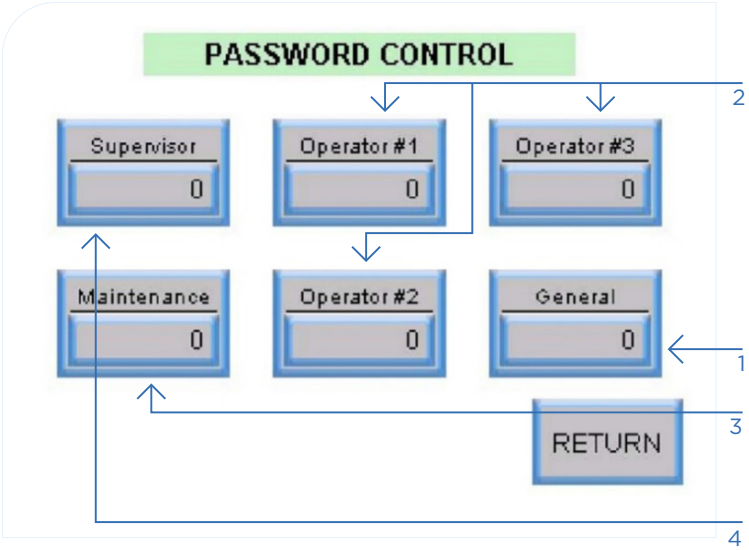

Figure 4: Password Screen

1. General (ID: General):
   – View access to the most common menus.
2. OPERATOR
   (ID: Operator#1, Operator#2, Operator#3):
   – Allows access & changes to the most common menus.
3. MAINTENANCE (ID: Maintenance):
   – Allows for additional access to Error Logs (w/Reset capabilities).
4. SUPERVISOR (ID: Supervisor):
   – Allows for additional access to change User Passwords.

© 2023 The Pyure Company Inc.

16.4 Data Entry

Certain menu items will require the user to enter alphanumeric characters to complete an action. When this occurs, the user will be prompted for input with one of the following alphanumeric popup screens:

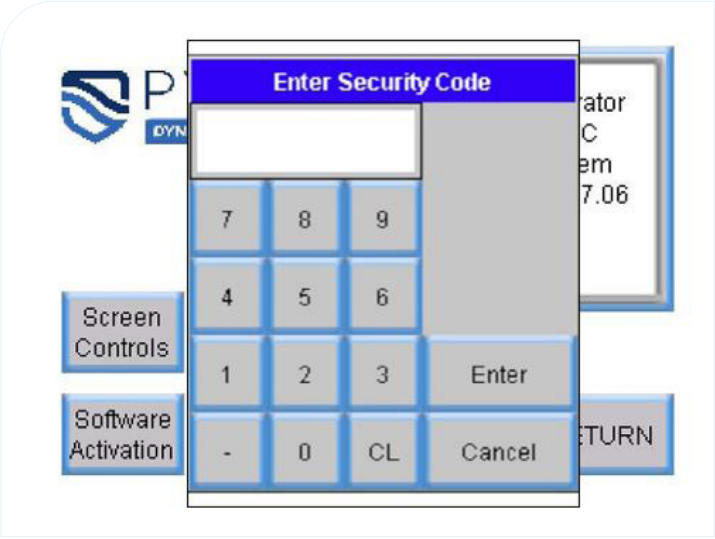

Figure 5: Security Code Entry

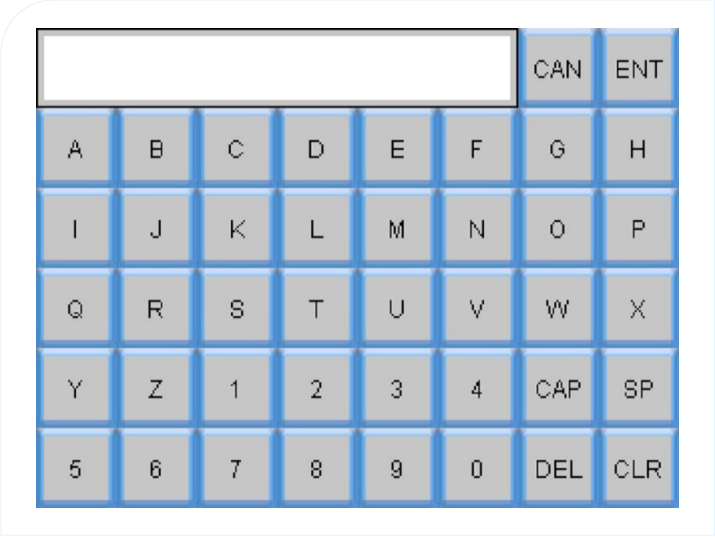

Figure 6: Alphanumeric Entry Screen

16.5 Main Screen

The MAIN screen available to all users. This screen is also the DEFAULT display when the system is executing normal/continuous operations.

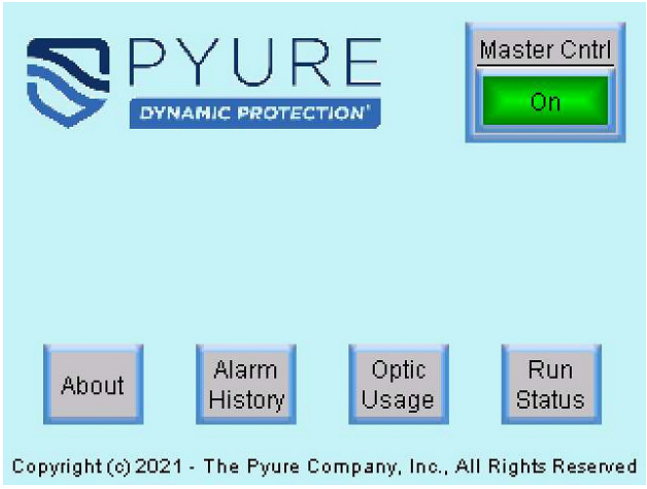

Figure 7: Main Screen

16.5.1 Master Control

The Main Power (Master Control) button is used to toggle power to all of the optics that are in IDx™ units that are “On Line”. Depressing the Main Power button does not affect the IDx™ Controller or attached sensors.

16.5.2 Menu Buttons

This area of the MAIN screen contains the available menu buttons. Depressing a menu button will open the associated display and/or sub-menus. If a password is required, you will be prompted for it before the system will allow access to the menu. Below is a description of the resultant displays.

© 2023 The Pyure Company Inc.

MENU ITEM	DESCRIPTION
ABOUT	Displays the ABOUT screen which contains system clock times, software/firmware version identifiers, model/serial numbers, access control and a change-password utility.
ALARM HISTORY	Displays the ALARM HISTORY screen used to view system-generated alarms detected by the Controller Subsystem.
OPTIC USAGE	Displays the Operating Switching and # of Hours on the Optics
RUN STATUS	Displays the 'Auto Mode' Processing Screen.

Table 4: Main Screen Menu Buttons

16.6 ABOUT Screen

The ABOUT screen is available to all users. This screen displays the Version of the PLC and HMI Screen Software versions.

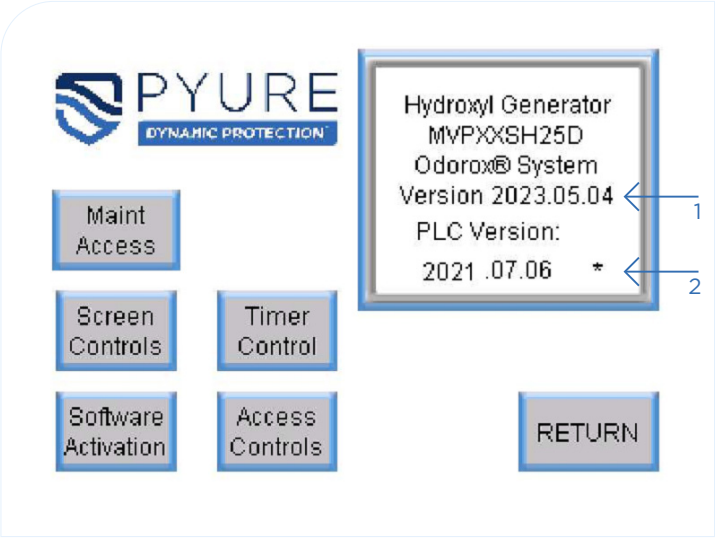

Figure 8: About Screen

16.6.1 About Information

The About screen displays:

(1) VERSION of the Screen/Panel Software. (Note: Format is "Year.Month.Day").

(2) VERSION of the PLC Software. (Note: Format is "Year.Month.Day").

16.6.2 Menu Buttons

This area of the ABOUT screen contains the available menu buttons. Depressing a menu button will open the associated display and/or sub-menus. If a password is required, you will be prompted for it before the system will allow access to the menu. Below is a description of the resultant displays.

MENU ITEM	DESCRIPTION
ACCESS CONTROLS	Setup Passwords for the different User Access Types (Password Protected – Need Supervisor Level Access)
MAINT ACCESS	Allow Maintenance Access for Servicing (Password Protected – Need Maintenance /or/ Supervisor Level Access)
SCREEN CONTROLS	Allows for Screen Brightness levels
SOFTWARE ACTIVATION	Switch to the Software Activation Screen (Software Licensing Activation)
TIMER CONTROL	Allow for the Setup of Timer Operations
RETURN	Returns to the MAIN Menu

Table 5: About Screen Menu Buttons

© 2023 The Pyure Company Inc.

16.7 ALARM Screen

The ALARM screen is available to all users. This screen displays the Error/Status Messages of the system.

16.7.1 Alarm History

The Alarm List displays a list of system-generated alarms detected by the Controller Subsystem. Alarms are initially sorted in chronological order with the most recent alarm at the top of the text window. The Line Up /or/ Line Down buttons at the bottom of the screen allow you to scroll through the history of alarm conditions.

NOTE: Alarm indications are also indicated by the appropriate Fault/Service indicator lights on the front of the Control Panel. Users recognizing a YELLOW or RED light should immediately verify the cause of the alarm by observing the entries in the Alarm List.

NOTE: Alarm indications will remain in the window and the associated Fault/Service light will remain illuminated until the condition and alarm have been cleared by a MAINTENANCE or SUPERVISOR user type.

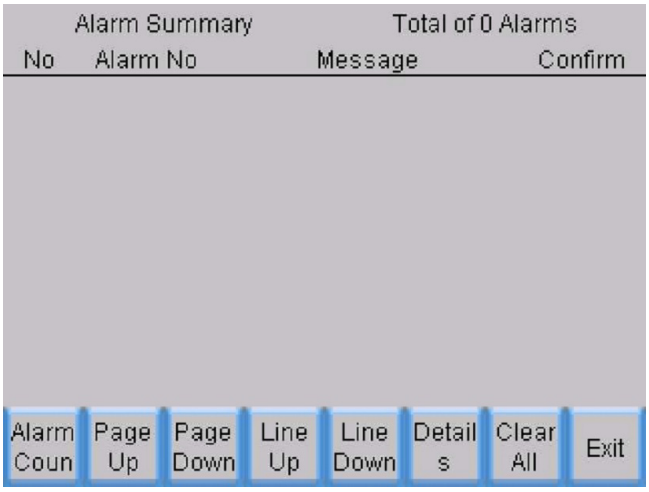

Figure 9: Alarm History Screen

16.8 Run Status Screen

The RUN STATUS screen is available to all users. This displays the state of the controller.

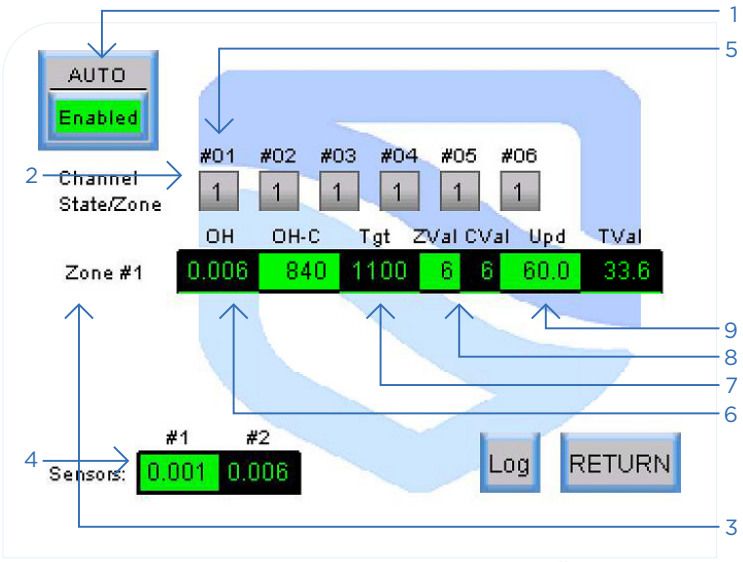

Figure 10: Auto RUN Status Screen - Six Unit Controller

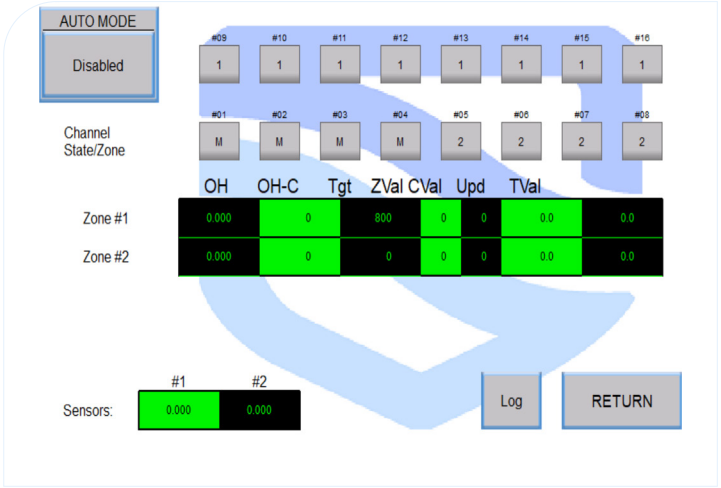

Figure 11: Auto RUN Status Screen - Sixteen Port Controller

16.8.1 Run Status Information

The RUN STATUS screen displays:

1. Enable/Disable AUTO mode processing (Password Protected).

© 2023 The Pyure Company Inc.

2. Shows Optic channel states which are either ON (green) /or/ OFF (gray).
3. Each Zone(s) State/Status Control Information.
4. Hydroxyl/Total Oxidant Sensor Levels (in ppm).
5. Each Channel is assigned to a ZONE (1 to 4) /or/ in Manual (M) mode. (IF a Channel is in Manual Mode it is not controlled by the Controller). In this figure all channels are assigned to zone 1.
6. Shows the Hydroxyl/Total Oxidant [OH] level in the Zone (in ppm). (The OH-C is an internal value of Hydroxyl/Total Oxidant in raw machine units).
7. Target Hydroxyl/Total Oxidant level (internal system value in raw machine units).
8. Number of Optic Channels in the Zone [ZVAL] /and/ Number of Optic Channels [CVAL] required for the Control system.
9. AUTO mode Controller Sampling Rate [Upd] and Current Control Loop Timer Value (in Seconds).

16.8.2 Menu Buttons

This area of the AUTO screen contains the available menu buttons. Depressing a menu button will open the associated display and/or sub-menus. Below is a description of the resultant displays.

MENU ITEM	DESCRIPTION
VOC LOG	Switches to the VOC Logging Screen
RETURN	Returns to the MAIN Menu

Table 6: Run Status Screen Menu Buttons

16.9 VOC Log Screen

The VOC Log screen, which captures raw oxidant levels (in raw machine units), is available to all users. This screen displays the historical value of the Sensors of the system.

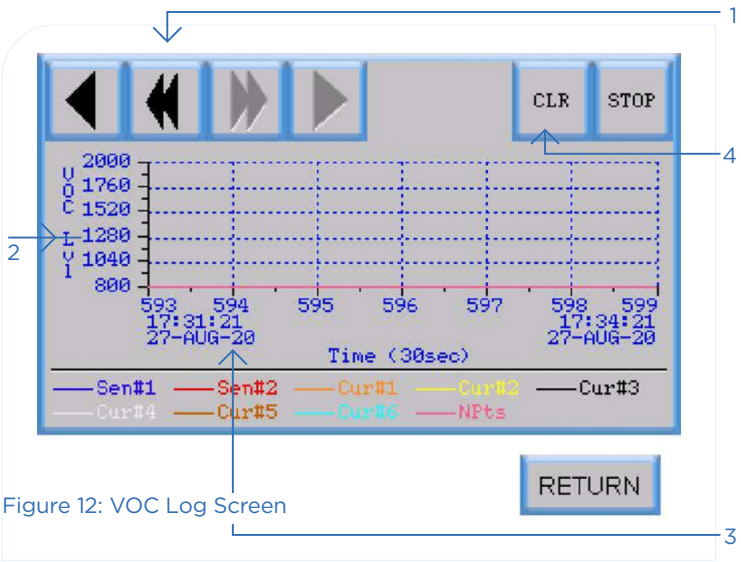

Figure 12: VOC Log Screen

© 2023 The Pyure Company Inc.

16.9.1 VOC Log Information

The VOC Log screen displays:

1. Controlling the graph display – moving forward/back in time.
2. VOC /or/ total Oxidant Level – raw data.
3. Date/time of the data sample.
4. Clear /or/ stop collecting the data.

16.10 Usage Setup

The Usage Setup screen is available to all user level, but only a Maintenance or Supervisor level can RESET the counters. This screen displays the number of hours and minutes that the UNIT optics have been operating.

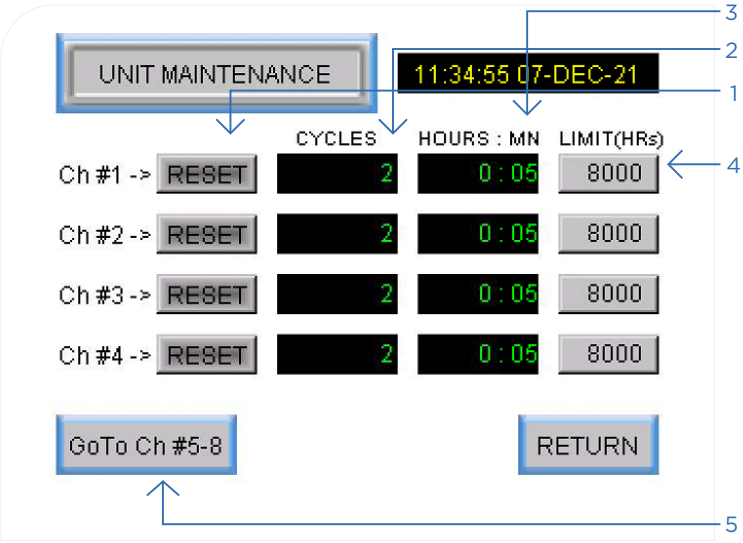

Figure 13: Usage Setup Screen

16.10.1 Usage Setup Information

The Usage screen displays:

1. Maintenance RESET of Optics Hours (Password Protected).
2. Displays the Optical Channel Cycles.
3. Displays the Optical Channel Usage (Time ON or Activated) in Hours and Minutes.
4. Allows you to SET the Point at which a WARNING message will be displayed when the Actual Usage Hours is Greater than or Equal to this SET Point (Hours). (In this example, whenever any of the Optical Banks have been ON for more than 8000 hours, a Warning Alarm/Message will be activated. (Password Protected).
5. Jump to a similar screen but for Channels #5 thru #8. Sixteen Port Controller will access Channels #1 thru #16.

16.11 Remote HMI Access

Steps for remote access:

1. Confirm network connections. Ensure the controller is connected to the local network via its external ethernet port and that the computer you will be using to connect is on the same network.

© 2023 The Pyure Company Inc.

2. Find/Set Controller IP

    a. Using the HMI on the Controller, hold your finger on the screen at the top left corner for 5-10 seconds until the dialogue box appears:

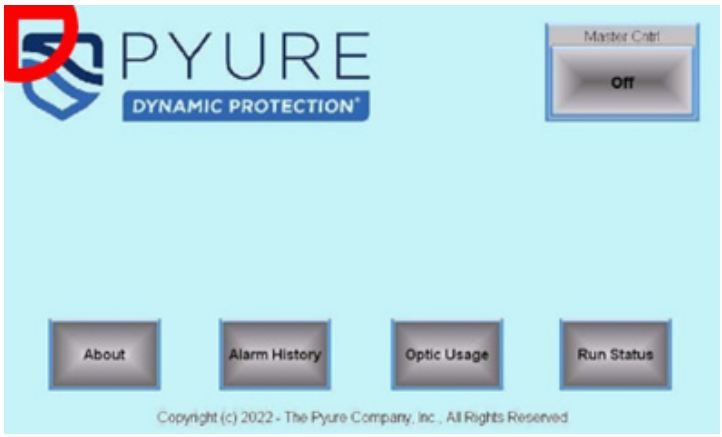

Figure 14: Main Screen

    b. Tap OK to open the next menu

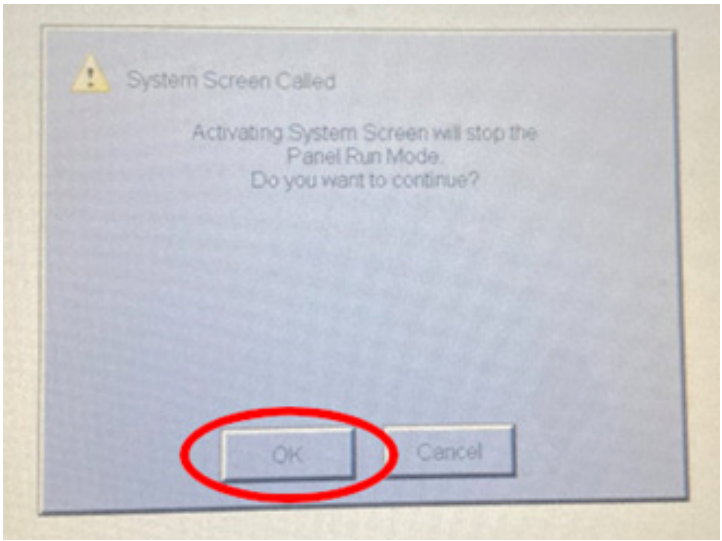

Figure 15: System Screen Notification

    c. Tap Setting to open the Setting menu

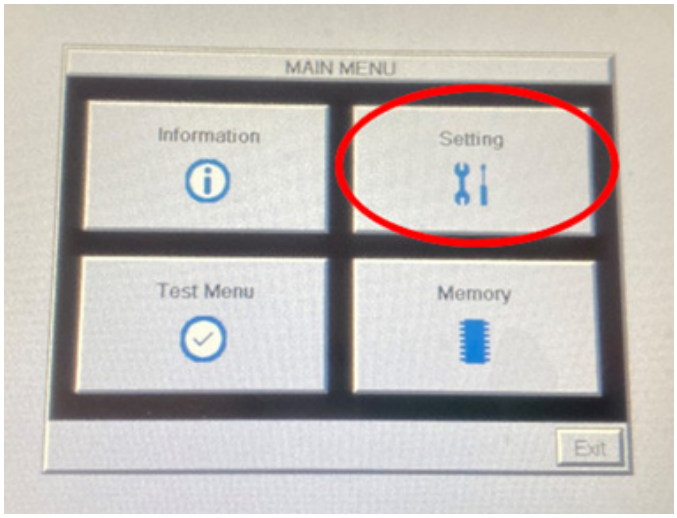

Figure 16: Main Menu

    d. Tap IP Address Setting IP Address Settings:

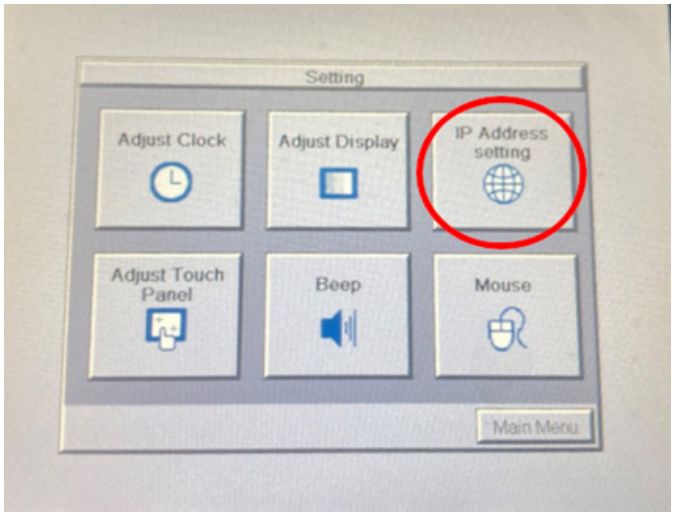

Figure 17: Setting Menu

© 2023 The Pyure Company Inc.

e. IP Address Settings:

- The default typically left after commissioning has the IP address fixed for a LAN connection with a laptop.
- If you have credentials you would like to input to fix the HMI on your network, you may input them in the fields shown. If you would like to switch the DHCP, click the DHCP icon, exit out and restart the process so the HMI may refresh onto your network. When you return to this screen, you will see a new IP address, record this address and return your computer.

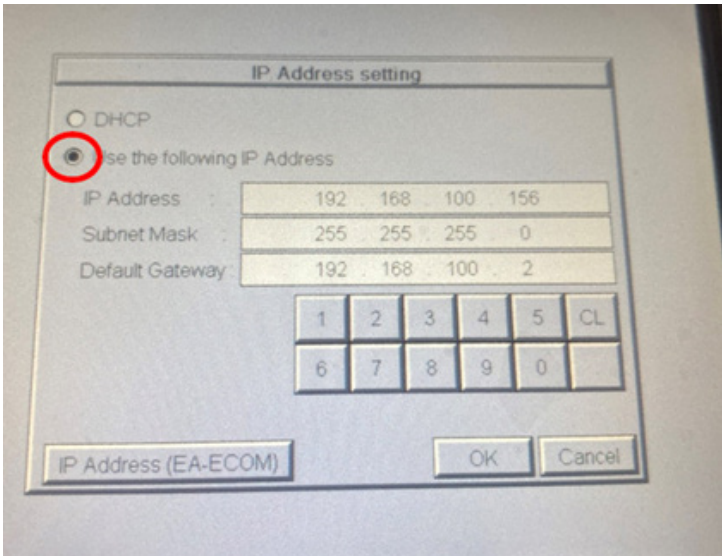

Figure 18: IP Address Setting Screen

© 2023 The Pyure Company Inc.

3. Connect To the HMI Remotely:

   a. Open an internet browser and input the IP address recorded from the HMI into the address bar.

   b. Select “Remote Access” on the options shown in yellow.

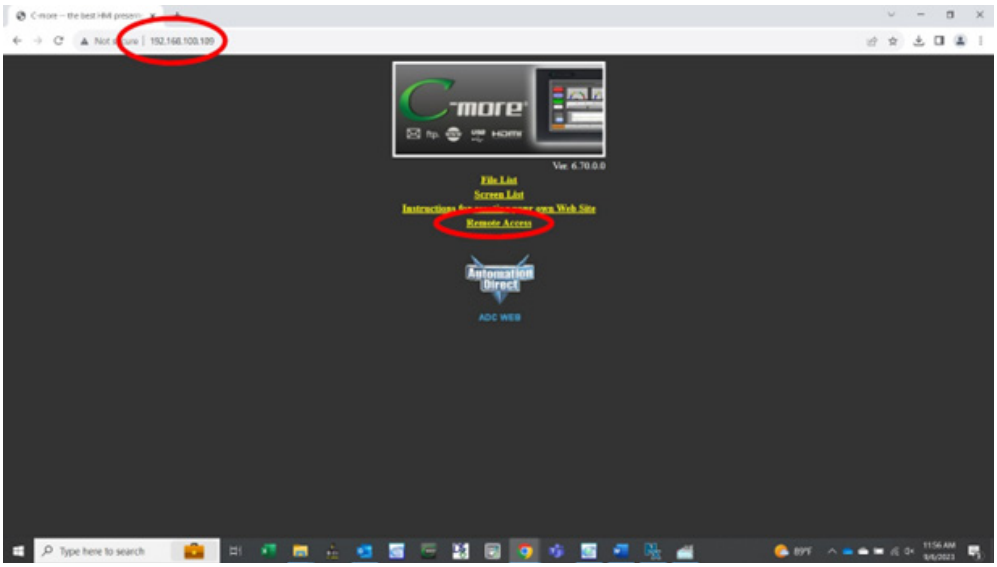

Figure 19: Internet Browser Screen: Remote Access

   c. Select “Built In Ethernet” from the next set of options.. This will initialize a file download. Save the file to your preferred location.

Figure 20: Internet Browser Screen: Built-in Ethernet

© 2023 The Pyure Company Inc.

d. Open the downloaded EXE file 0151 from the location where the file was saved— File Name will be RemoteHMI_IP[YOUR IP ADDRESS HERE].EXE

Figure 21: Internet Browser Screen: Open saved EXE file

e. Log in through remote access application: For user name input “User” and leave the password blank — Click OK.

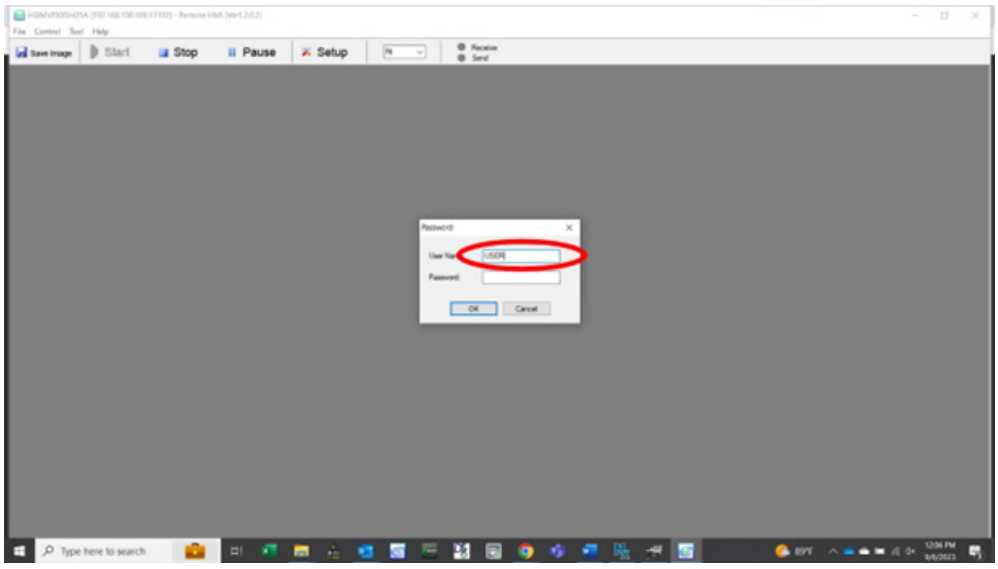

Figure 22: Remote Application Screen: Login

© 2023 The Pyure Company Inc.

f. You are now remotely connected to the HMI, and can view all screens, but NOT make any changes to states of the controller.

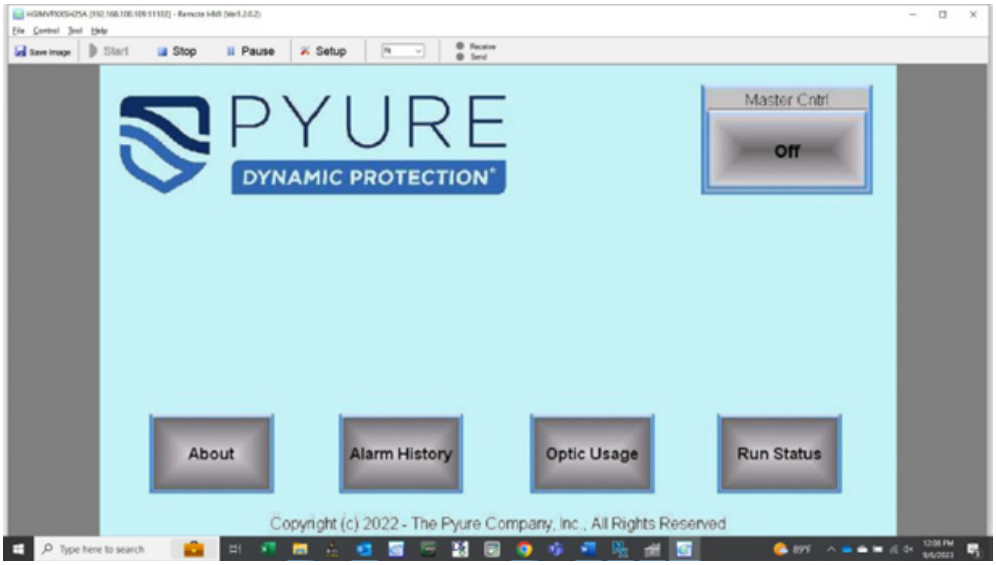

Figure 23: Remote Application Screen: Main Menu

© 2023 The Pyure Company Inc.

17. Appendix B: Alarm Codes & Definitions - Six Unit Controller

ALARM#	STATUS/ERROR MESSAGE	STATUS/ERROR MESSAGE DESCRIPTION	CORRECTIVE ACTION
0001	CHANNEL #1 – OPTIC LIFE EXCEEDS SET VALUE	Warning: Optic(s) connected to channel operational hours have exceeded the Set Point (Typically set at 8000 hours).	Replace optic(s) and reset specified optic life back to zero hours. (Requires qualified technician)
0002	CHANNEL #2 – OPTIC LIFE EXCEEDS SET VALUE		
0003	CHANNEL #3 – OPTIC LIFE EXCEEDS SET VALUE		
0004	CHANNEL #4 – OPTIC LIFE EXCEEDS SET VALUE		
0005	CHANNEL #5 – OPTIC LIFE EXCEEDS SET VALUE		
0006	CHANNEL #6 – OPTIC LIFE EXCEEDS SET VALUE		
0007	UNIT #1 – OPTIC CURRENT LEVEL BELOW SET PT	Warning: Optics in Set may have one or more optics not operational/ functioning.	An optic(s) replacement and reset may be required with further diagnosis is required. Consult a qualified technician.
0008	UNIT #2 – OPTIC CURRENT LEVEL BELOW SET PT		
0009	UNIT #3 – OPTIC CURRENT LEVEL BELOW SET PT		
0010	UNIT #4 – OPTIC CURRENT LEVEL BELOW SET PT		
0011	UNIT #5 – OPTIC CURRENT LEVEL BELOW SET PT		
0012	UNIT #6 – OPTIC CURRENT LEVEL BELOW SET PT		
0013	LICENSE INVALID / EXPIRED	Error: Current License Activation Code is not Valid or has Expired.	Contact Pyure for a new annual activation code.
0014	LICENSE EXPIRED	Error: Current License Activation Code has Expired.	
0015	LICENSE IS ABOUT TO EXPIRE	Warning: License Activation Code will Expire Soon.	

© 2023 The Pyure Company Inc.

18. Appendix C: Alarm Codes & Definitions - Sixteen Port Controller

ALARM#	STATUS/ERROR MESSAGE	STATUS/ERROR MESSAGE DESCRIPTION	CORRECTIVE ACTION
0001	CHANNEL #1 – OPTIC LIFE EXCEEDS SET VALUE	Warning: Optic(s) connected to channel operational hours have exceeded the Set Point (Typically set at 8000 hours).	Replace optic(s) and reset specified optic life back to zero hours. (Requires qualified technician)
0002	CHANNEL #2 – OPTIC LIFE EXCEEDS SET VALUE		
0003	CHANNEL #3 – OPTIC LIFE EXCEEDS SET VALUE		
0004	CHANNEL #4 – OPTIC LIFE EXCEEDS SET VALUE		
0005	CHANNEL #5 – OPTIC LIFE EXCEEDS SET VALUE		
0006	CHANNEL #6 – OPTIC LIFE EXCEEDS SET VALUE		
0007	CHANNEL #7 – OPTIC LIFE EXCEEDS SET VALUE		
0008	CHANNEL #8 – OPTIC LIFE EXCEEDS SET VALUE		
0009	CHANNEL #9 – OPTIC LIFE EXCEEDS SET VALUE		
0010	CHANNEL #10 – OPTIC LIFE EXCEEDS SET VALUE		
0011	CHANNEL #11 – OPTIC LIFE EXCEEDS SET VALUE		
0012	CHANNEL #12 – OPTIC LIFE EXCEEDS SET VALUE		
0013	CHANNEL #13 – OPTIC LIFE EXCEEDS SET VALUE		
0014	CHANNEL #14 – OPTIC LIFE EXCEEDS SET VALUE		
0015	CHANNEL #15 – OPTIC LIFE EXCEEDS SET VALUE		
0016	CHANNEL #16 – OPTIC LIFE EXCEEDS SET VALUE		

© 2023 The Pyure Company Inc.

0017	UNIT #1 – OPTIC CURRENT LEVEL BELOW SET PT	Warning: Optics in Set may have one or more optics not operational/ functioning.	An optic(s) replacement and reset may be required with further diagnosis is required. Consult a qualified technician.
0018	UNIT #2 – OPTIC CURRENT LEVEL BELOW SET PT		
0019	UNIT #3 – OPTIC CURRENT LEVEL BELOW SET PT		
0020	UNIT #4 – OPTIC CURRENT LEVEL BELOW SET PT		
0021	UNIT #5 – OPTIC CURRENT LEVEL BELOW SET PT		
0022	UNIT #6 – OPTIC CURRENT LEVEL BELOW SET PT		
0023	UNIT #7 – OPTIC CURRENT LEVEL BELOW SET PT		
0024	UNIT #8 – OPTIC CURRENT LEVEL BELOW SET PT		
0025	UNIT #9 – OPTIC CURRENT LEVEL BELOW SET PT		
0026	UNIT #10 – OPTIC CURRENT LEVEL BELOW SET PT		
0027	UNIT #11 – OPTIC CURRENT LEVEL BELOW SET PT		
0028	UNIT #12 – OPTIC CURRENT LEVEL BELOW SET PT		
0029	UNIT #13 – OPTIC CURRENT LEVEL BELOW SET PT		
0030	UNIT #14 – OPTIC CURRENT LEVEL BELOW SET PT		
0031	UNIT #15 – OPTIC CURRENT LEVEL BELOW SET PT		
0032	UNIT #16 – OPTIC CURRENT LEVEL BELOW SET PT		
0033	LICENSE INVALID / EXPIRED	Error: Current License Activation Code is not Valid or has Expired.	Contact Pyure for a new annual activation code.
0034	LICENSE EXPIRED	Error: Current License Activation Code has Expired.	
0035	LICENSE IS ABOUT TO EXPIRE	Warning: License Activation Code will Expire Soon.	

© 2023 The Pyure Company Inc.

0036	ZONE #1: DISABLED DUE TO SENSOR(S)	Error: Sensor in Zone is not currently operation/functioning and Zone is disabled.	Check if the Sensor in Error is in Calibration Mode (leaving enough time for sensor to warm up and calibrate). If the Sensor is not in Calibration Mode, check the wiring to/from the Sensor and the Controller.
0037	ZONE #2: DISABLED DUE TO SENSOR(S)		
0038	ZONE #3: DISABLED DUE TO SENSOR(S)		
0039	ZONE #4: DISABLED DUE TO SENSOR(S)		
0040	SENSOR #1: CALIBRATING/OR/ IN ERROR	Error: Sensor is not currently operational/ functioning.	
0041	SENSOR #2: CALIBRATING/OR/ IN ERROR		
0042	SENSOR #3: CALIBRATING/ OR/IN ERROR		
0043	SENSOR #4: CALIBRATING/ OR/IN ERROR		

© 2023 The Pyure Company Inc.

19. Appendix D - Six Unit Controller: Technical Documents

19.1 Appendix D: Six Unit Controller (120V) [MVPXXMA29]

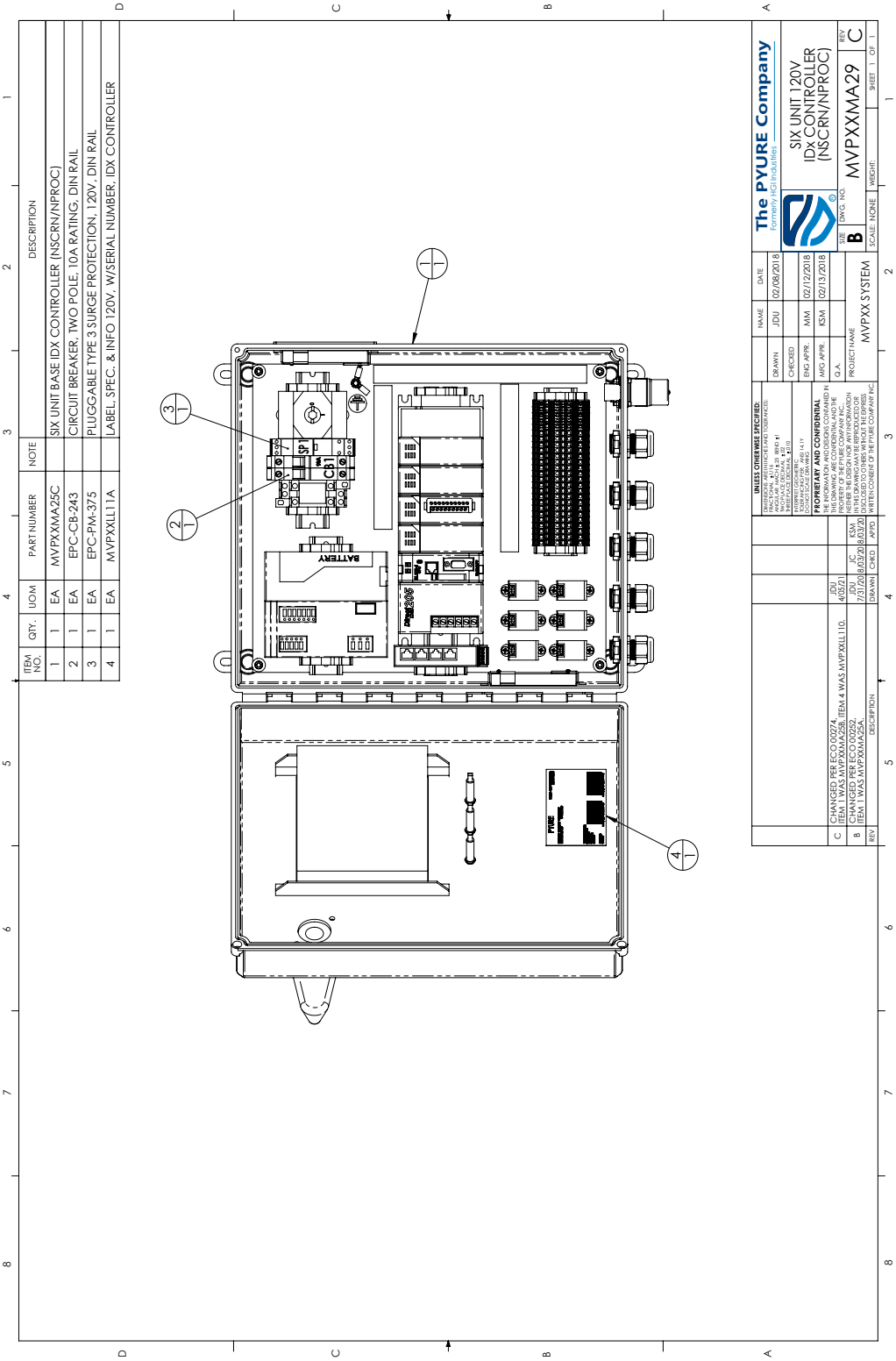

ITEM NO.	QTY.	UOM	PART NUMBER	NOTE	DESCRIPTION
1	1	EA	MVPXXMA25C		SIX UNIT BASE IDX CONTROLLER (NSCRN/NPROC)
2	1	EA	EPC-CB-243		CIRCUIT BREAKER, TWO POLE, 10A RATING, DIN RAIL
3	1	EA	EPC-PM-375		PLUGGABLE TYPE 3 SURGE PROTECTION, 120V, DIN RAIL
4	1	EA	MVPXXLL11A		LABEL, SPEC, & INFO 120V, W/SERIAL NUMBER, IDX CONTROLLER

REV	DESCRIPTION	DRAWN	CHKD	APPD
C	CHANGED PER ECO 00274. ITEM 1 WAS MVPXXMA25B, ITEM 4 WAS MVPXXLL110.	JDU 4/05/21		
B	CHANGED PER ECO 00252. ITEM 1 WAS MVPXXMA25A.	JDU 7/31/20	JC 8/03/20	KSM 8/03/20

UNLESS OTHERWISE SPECIFIED: DIMENSIONS ARE IN INCHES AND TOLERANCES ARE AS FOLLOWS: FRACTIONAL ± 1/32 ANGULAR: MACH ± 0.5° BEND ± 1° TWO PLACE DECIMAL ± 0.01 THREE PLACE DECIMAL ± 0.005 INTERPRET GEOMETRIC TOLERANCING PER: ASME Y14.5M-1994 MATERIAL: SEE BOM FINISH: SEE BOM

PROPRIETARY AND CONFIDENTIAL
THE INFORMATION AND DESIGNS CONTAINED IN THIS DRAWING ARE CONSIDERED AS THE PROPERTY OF THE PYURE COMPANY INC.
NEITHER THE DESIGN NOR ANY INFORMATION DISCLOSED HEREIN MAY BE REPRODUCED OR DISCLOSED TO OTHERS WITHOUT THE EXPRESS WRITTEN CONSENT OF THE PYURE COMPANY INC

	NAME	DATE
DRAWN	JDU	02/08/2018
CHECKED		
ENG. APPR.	MM	02/12/2018
MFG. APPR.	KSM	02/13/2018
Q.A.		
PROJECT NAME	MVPXX SYSTEM	

The PYURE Company
formerly AQUAPHOR®

SIZE B | DWG. NO. MVPXXMA29 | REV C
SCALE: NONE | WEIGHT: | SHEET 1 OF 1

SIX UNIT 120V IDX CONTROLLER (NSCRN/NPROC)

© 2023 The Pyure Company Inc.

19.2 Appendix D: Six Unit Controller (210-240V) [MVPXXMA30]

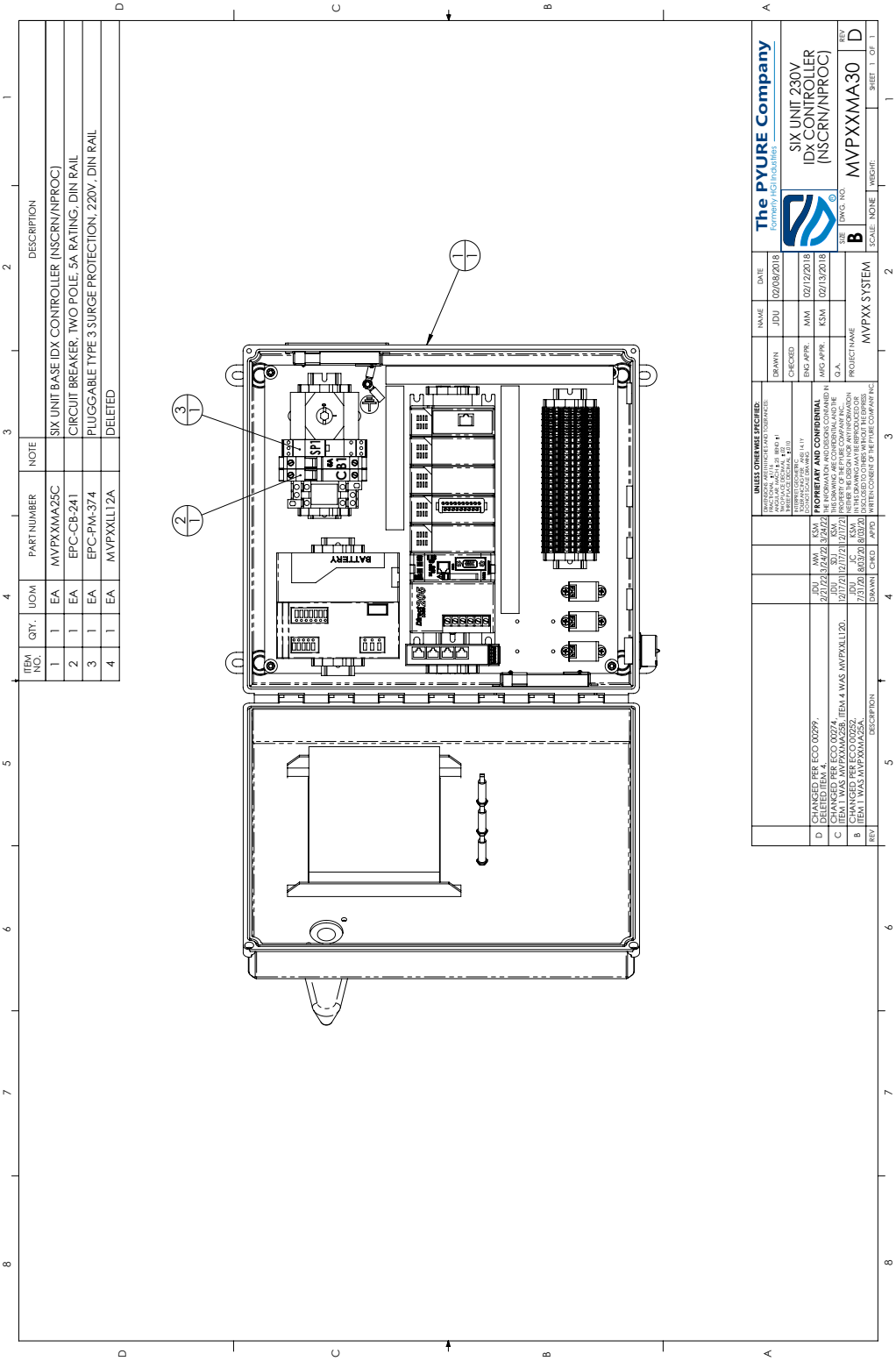

© 2023 The Pyure Company Inc.

19.3 Appendix D: Sensor [MVPXXMA47]

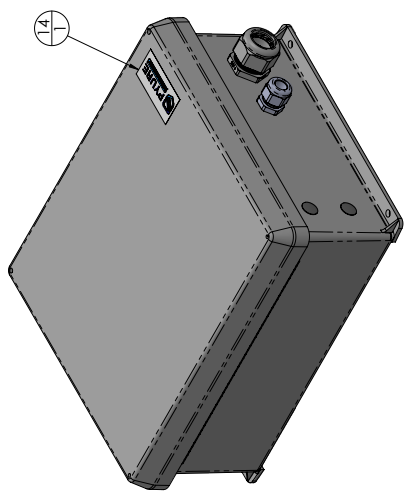

ITEM NO.	QTY.	UOM	PART NUMBER	NOTE	DESCRIPTION
1	1	EA	MVPXXMA45C		REMOTE SENSOR BASE ASSEMBLY
2	1	EA	ESN-XX-259		MVP SERIES, DISPLAY MONITOR (4-20 mA)
3	1	EA	ESN-XX-355		DRAGER SENSOR OZONE - 68 14 005
4	1	EA	ESN-XX-256		MOUNTING DOCKING STATION
5	2	EA	HFS-PH-130		SCREW, PAN HEAD, PHILLIPS, #8-32 X 1/2" LG, 18-8 SST
6	2	EA	HFW-SL-141		WASHER, LOCK, #8, 18-8 SST
7	2	EA	HFW-FL-142		WASHER, FLAT, #8, 18-8 SST
8	1	EA	CON-NX-587		GLAND, STRAIGHT THRU, 1" NPT, NYLON, GRAY
9	1	EA	CON-NX-588		LOCKNUT, NYLON, 1" NPT, GRAY
10	1	EA	HBH-XX-019		ROUND THERMOPLASTIC RUBBER CABLE GROMMET 8 - 9 mm DIA
11	2	EA	HBH-XX-450		PLUG, LOCKING, HOLE DIA .625, PANEL MAX THK 1/8", NYLON
12	1	EA	ESN-XX-260		PLUG, WITH CABLE, 30 M/98' FOR REMOTE SENSOR
13	1	EA	ESN-XX-357		MVP SERIES REMOTE SENSOR BASE STATION
14	1	EA	XSA00LL510		LABEL, PYURE DYNAMIC PROTECTION
15	1	EA	CON-NX-583		GLAND, STR. THRU, 1/2 NPT HUB, LIQUID TIGHT CORDGRIP, NYLON, GRAY
16	1	EA	CON-NX-584		LOCKNUT, NYLON, 1/2 NPT, GRAY, STR. NPS THREAD
17	1	EA	MVPXXLL22A		LABEL, SPEC. & INFO. W/SERIAL NUMBER, REMOTE SENSOR DR

REV	DESCRIPTION	DRAWN	CHKD	APPD
D	CHANGED PER ECO 00275. ITEM 3 WAS ESN-XX-359, ITEM 14 WAS XSA00LL050, ITEM 17 WAS MVPXXLL220.	JDU 4/14/21		
C	CHANGED PER ECO 00256. ITEM 1 WAS MVPXXMA45B.	JDU 8/24/20	JC 8/25/20	KSM 8/25/20
B	CHANGED PER ECO 00252. ITEM 1 WAS MVPXXMA45A.	JDU 7/30/20	JC 8/03/20	KSM 8/03/20
A	CHANGED PER ECO 00210. ITEM 1 WAS MVPXXMA450.	JDU 5/02/19		KM 5/02/19

UNLESS OTHERWISE SPECIFIED:
DIMENSIONS ARE IN INCHES AND TOLERANCES:
FRACTIONAL ± 1/16
ANGULAR: MACH ± 0.5 BEND ± 1
TWO PLACE DECIMAL ± .010
THREE PLACE DECIMAL ± .010
INTERPRET GEOMETRIC TOLERANCING PER: ANSI Y14.5
DO NOT SCALE DRAWING

PROPRIETARY AND CONFIDENTIAL
THE INFORMATION AND DESIGNS CONTAINED IN THIS DRAWING ARE CONFIDENTIAL AND THE PROPERTY OF THE PYURE COMPANY INC. NEITHER THIS DESIGN NOR ANY INFORMATION IN THIS DRAWING MAY BE REPRODUCED OR DISCLOSED TO OTHERS WITHOUT THE EXPRESS WRITTEN CONSENT OF THE PYURE COMPANY INC.

	NAME	DATE
DRAWN	JDU	11/28/2018
CHECKED		
ENG APPR.	MM	11/28/2018
MFG APPR.	KSM	11/28/2018
Q.A.		
PROJECT NAME	MVPXX SYSTEM	

The PYURE Company
Formerly HGI Industries

REMOTE SENSOR DRAGER ASSEMBLY (98 FT CABLE)

SIZE B | DWG. NO. MVPXXMA47 | REV D
SCALE: NONE | WEIGHT: | SHEET 1 OF 2

19.3 Appendix D: Sensor (cont) [MVPXXMA47]

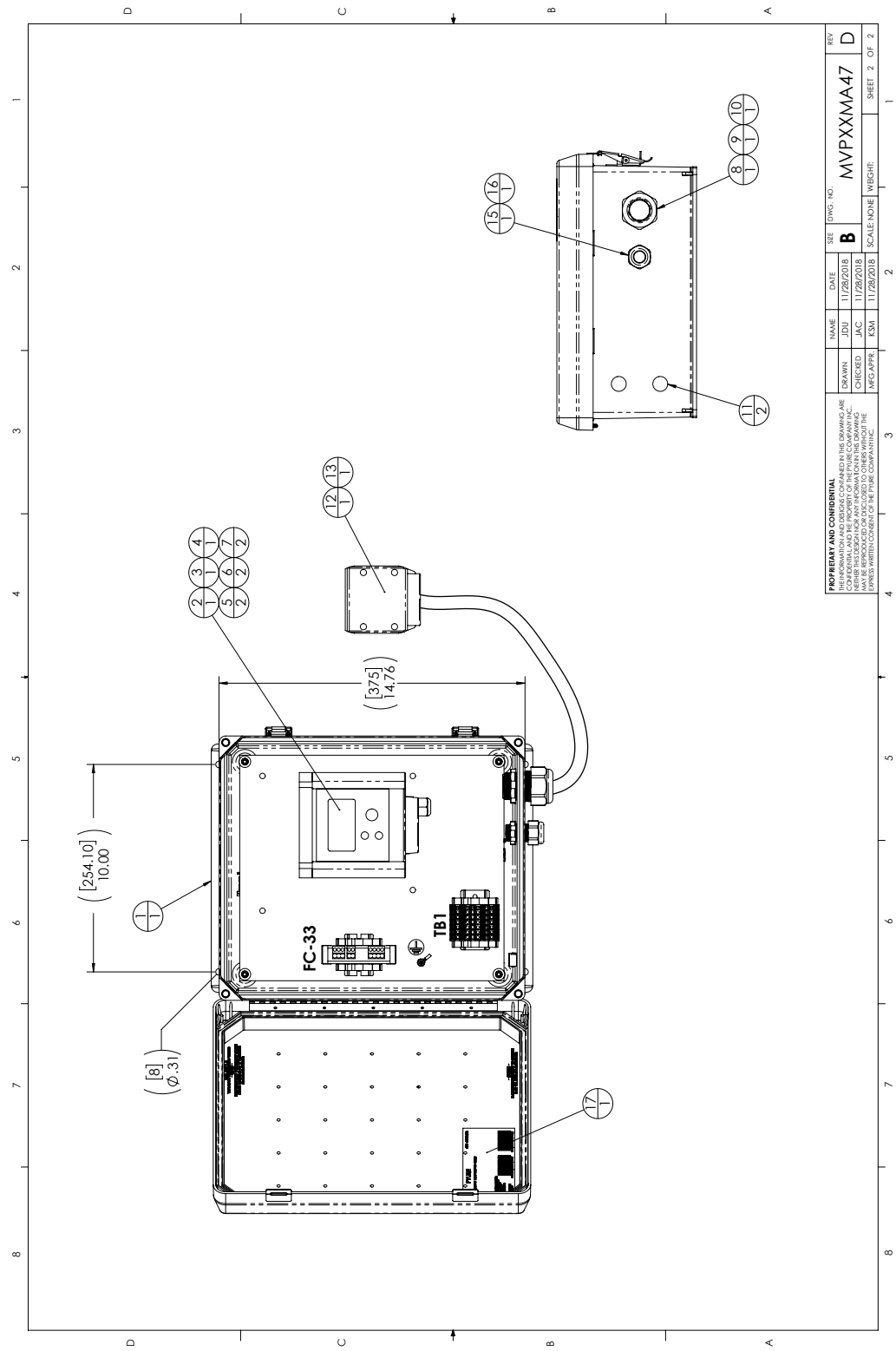

19.4 Appendix D: IDI03™ In-Duct Unit

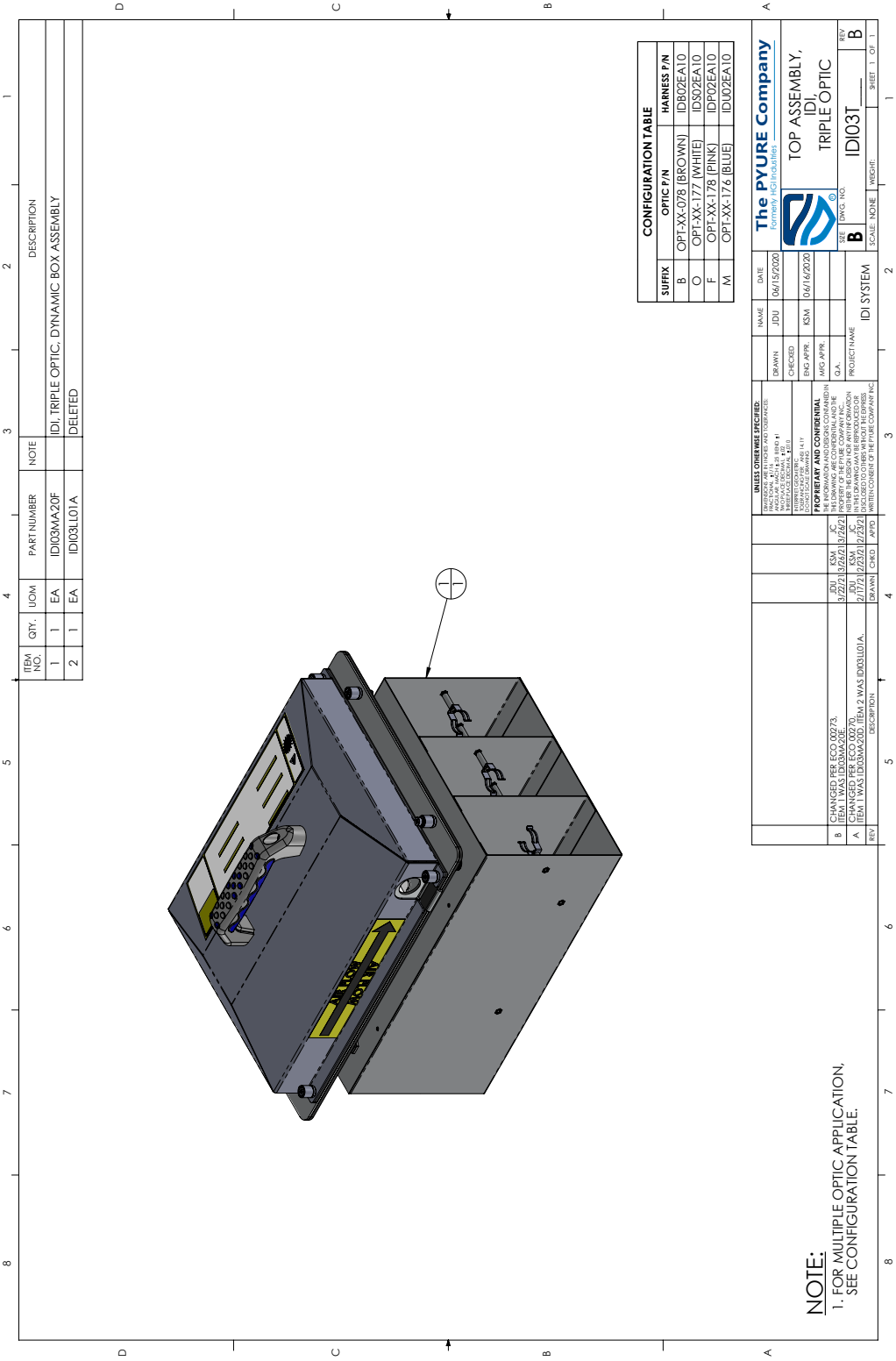

© 2023 The Pyure Company Inc.

19.5 Appendix D: IDI03™ Mounting Plate [IDIXXMD69]

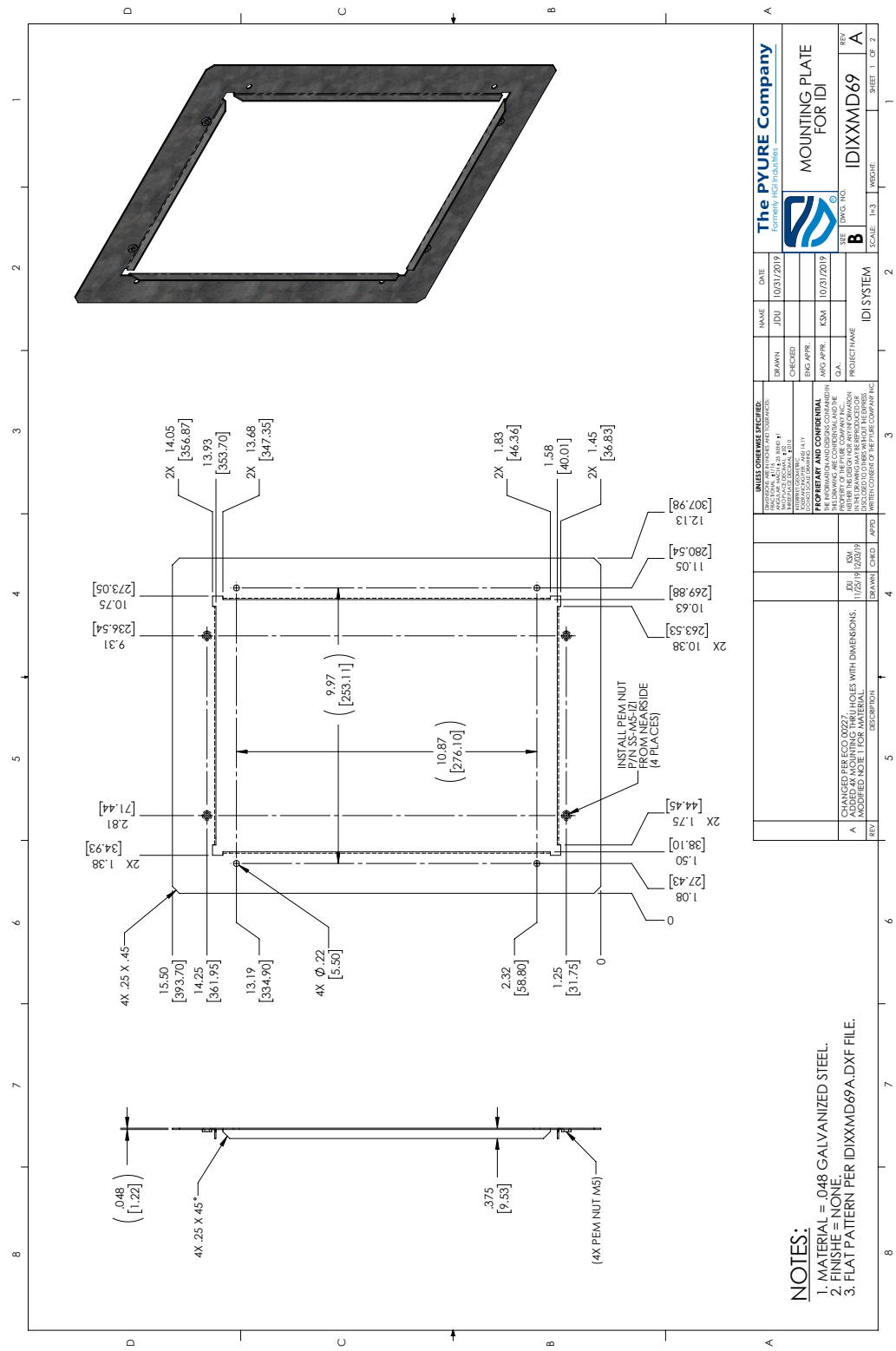

© 2023 The Pyure Company Inc.

19.6 Appendix D: In-Duct Unit InLine Dynamic Enclosure [IDIXXMA20]

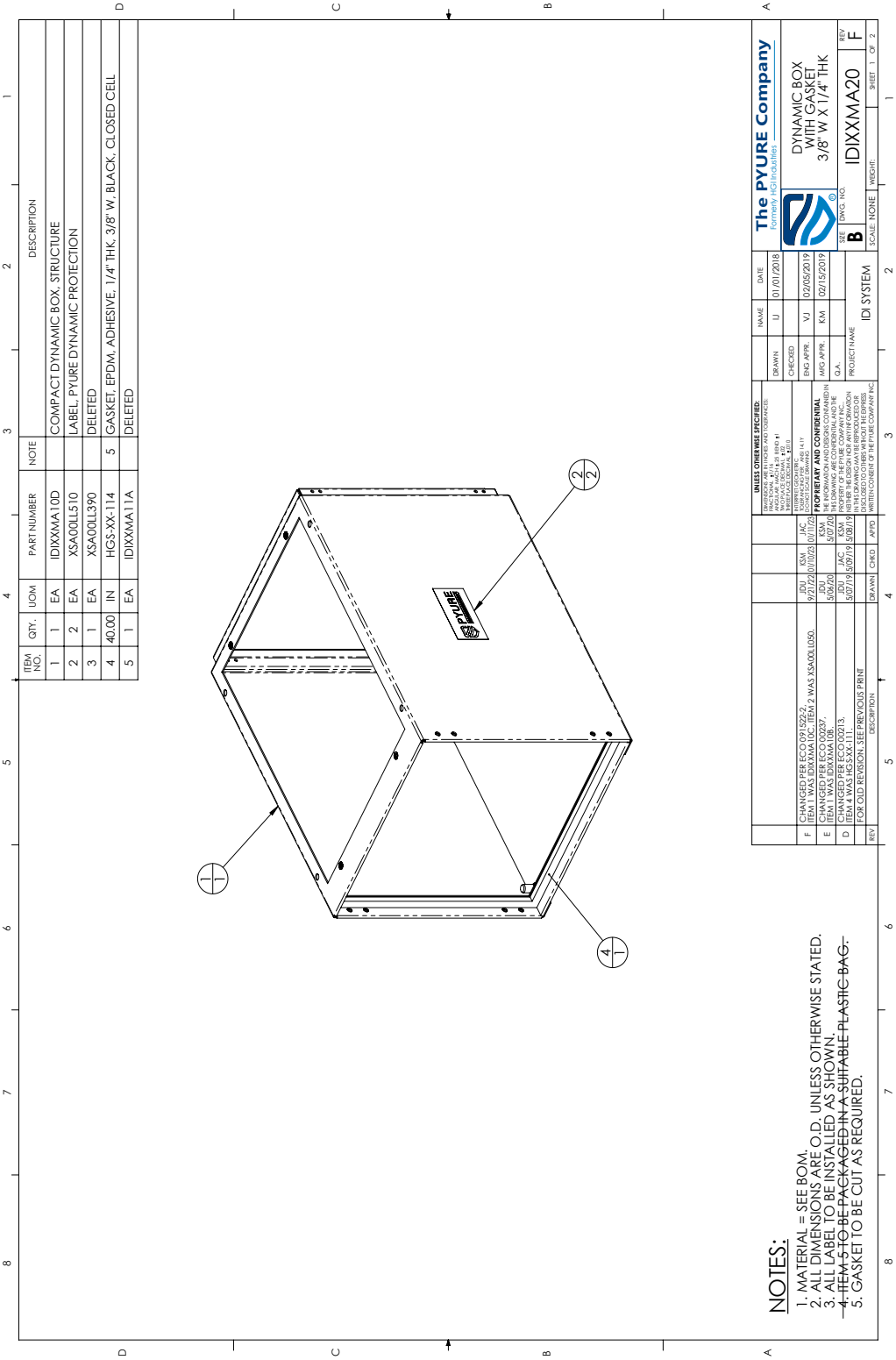

ITEM NO.	QTY.	UOM	PART NUMBER	NOTE	DESCRIPTION
1	1	EA	IDIXXMA10D		COMPACT DYNAMIC BOX, STRUCTURE
2	2	EA	XSA00LL510		LABEL, PYURE DYNAMIC PROTECTION
3	1	EA	XSA00LL390		DELETED
4	40.00	IN	HGS-XX-114	5	GASKET, EPDM, ADHESIVE, 1/4" THK, 3/8" W, BLACK, CLOSED CELL
5	1	EA	IDIXXMA11A		DELETED

NOTES:
1. MATERIAL = SEE BOM.
2. ALL DIMENSIONS ARE O.D. UNLESS OTHERWISE STATED.
3. ALL LABEL TO BE INSTALLED AS SHOWN.
4. ~~ITEM 5 TO BE PACKAGED IN A SUITABLE PLASTIC BAG.~~
5. GASKET TO BE CUT AS REQUIRED.

REV	DESCRIPTION	DRAWN	CHK'D	APP'D	DATE
F	CHANGED PER ECO 091522-2, ITEM 1 WAS IDIXXMA10C; ITEM 2 WAS XSA00LL050.	JDU	KSM	JAC	9/21/22 10/10/23 10/11/23
E	CHANGED PER ECO 00237, ITEM 1 WAS IDIXXMA10B.	JDU	JAC	KSM	9/20/20 5/27/20
D	CHANGED PER ECO 00213, ITEM 4 WAS HGS-XX-111.	JDU	JAC	KSM	9/07/19 5/09/19 5/08/19

UNLESS OTHERWISE SPECIFIED:
DIMENSIONS ARE IN INCHES AND TOLERANCES ARE:
ANGULAR: MACH ± 2.5 BEND ± 1
TWO PLACE DECIMAL ± .01
THREE PLACE DECIMAL ± .010
INTERPRET GEOMETRIC TOLERANCING PER ASME Y14.5M-1994
TOLERANCES PER: ASME Y14.5
INTERPRET DRAWING IN ENGLISH

PROPRIETARY AND CONFIDENTIAL
THE INFORMATION AND DESIGNS CONTAINED IN THIS DRAWING ARE CONSIDERED TO BE THE PROPERTY OF THE PYURE COMPANY INC.
NEITHER THE DESIGN NOR ANY INFORMATION CONTAINED HEREIN MAY BE REPRODUCED OR DISCLOSED TO OTHERS WITHOUT THE EXPRESS WRITTEN CONSENT OF THE PYURE COMPANY INC.

	NAME	DATE
DRAWN	IJ	01/01/2018
CHECKED		
ENG APPR.	VJ	02/05/2019
MFG APPR.	KM	02/15/2019
Q.A.		
PROJECT NAME	IDI SYSTEM	

The PYURE Company
formerly HCI TECHNOLOGY

DYNAMIC BOX WITH GASKET 3/8" W X 1/4" THK

SIZE B | DWG. NO. IDIXXMA20 | REV F

SCALE: NONE | WEIGHT: | SHEET 1 OF 2

© 2023 The Pyure Company Inc.

19.6 Appendix D: In-Duct Unit InLine Dynamic Enclosure (cont) [IDIXXMA20]

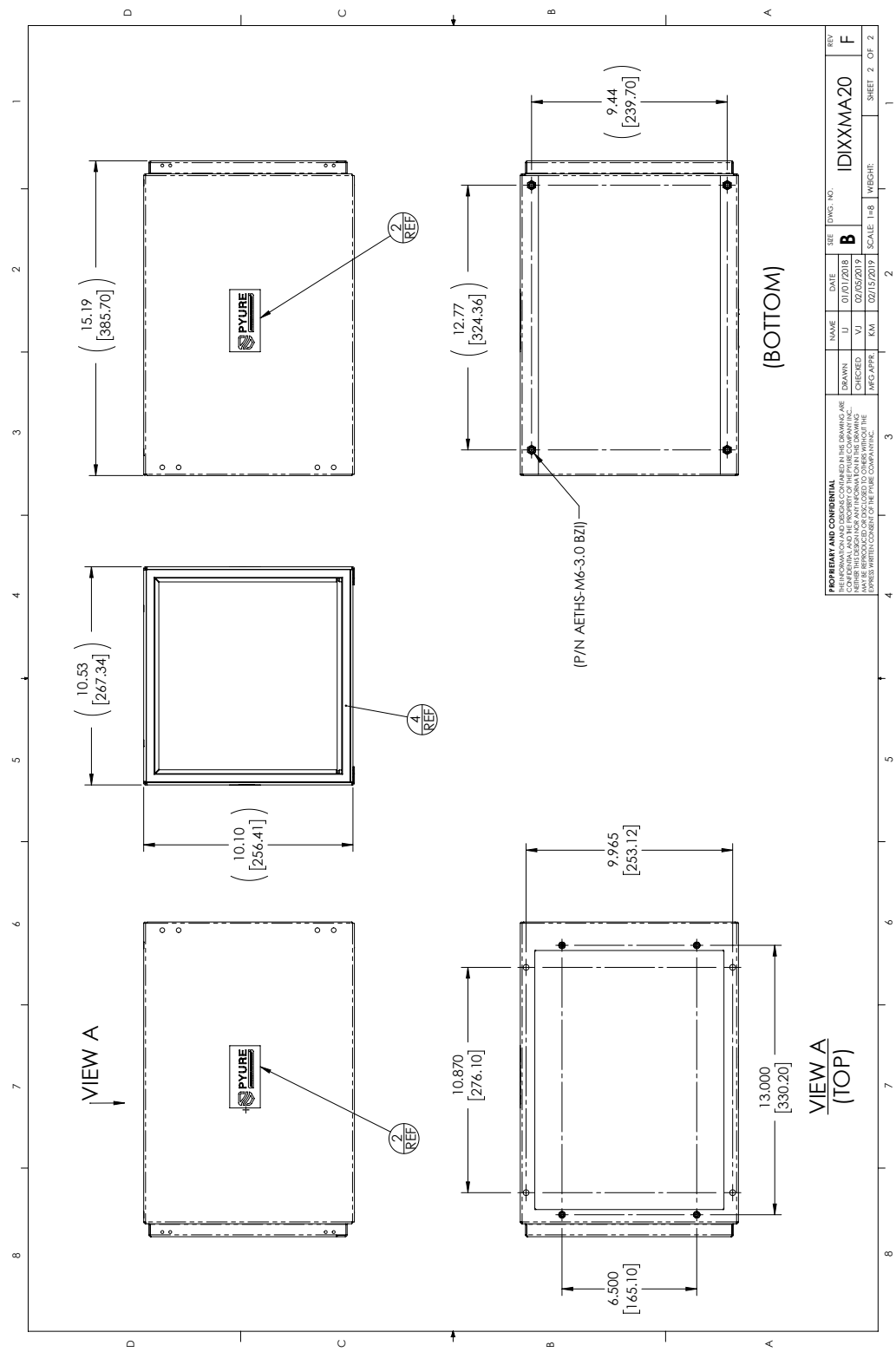

© 2023 The Pyure Company Inc.

19.7 Appendix D: In-Duct Unit (200mm) Interface Plate [IDIXXMA22]

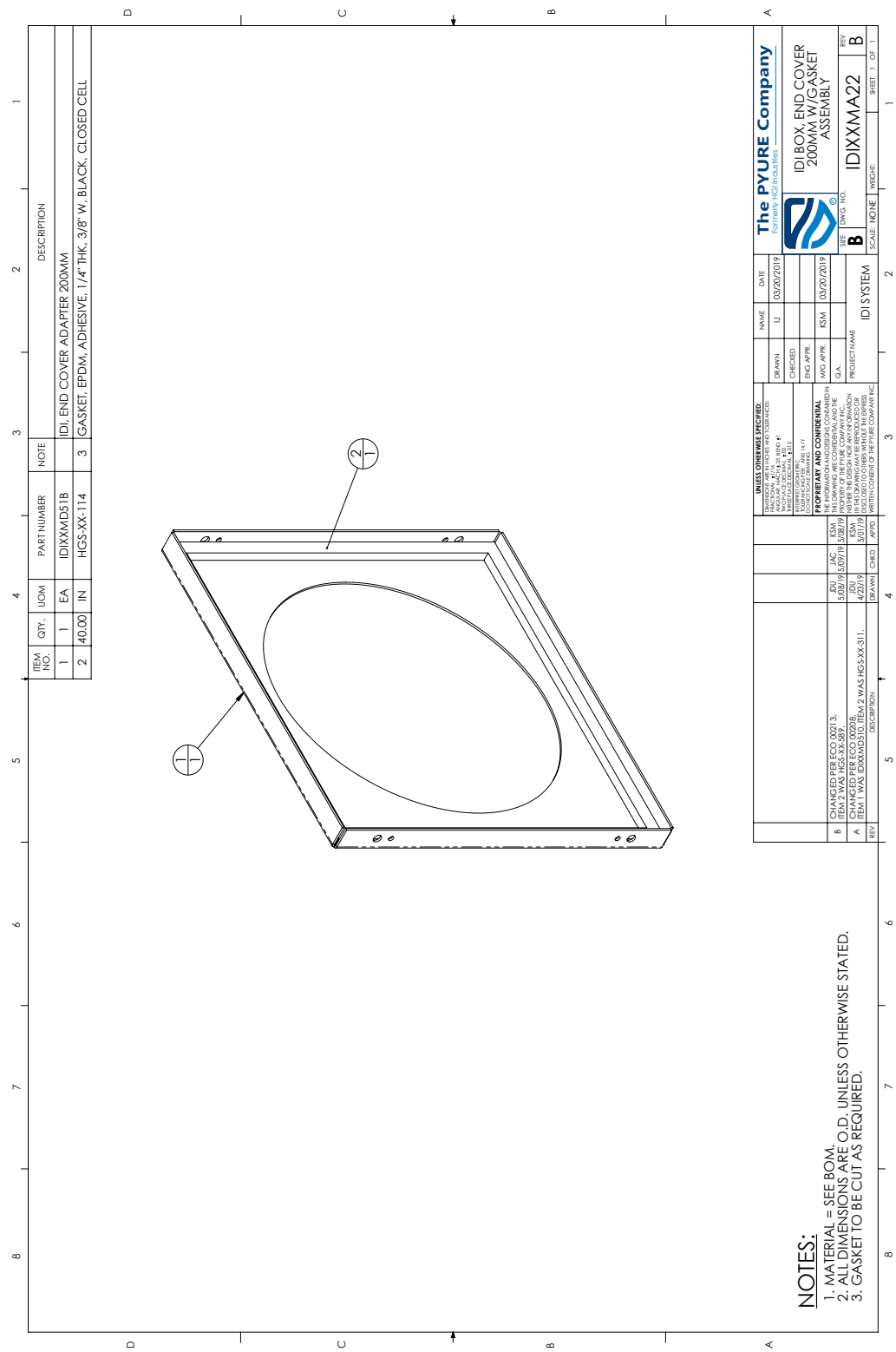

© 2023 The Pyure Company Inc.

19.8 Appendix D: In-Duct Unit (160mm) Interface Plate [IDIXXMA23]

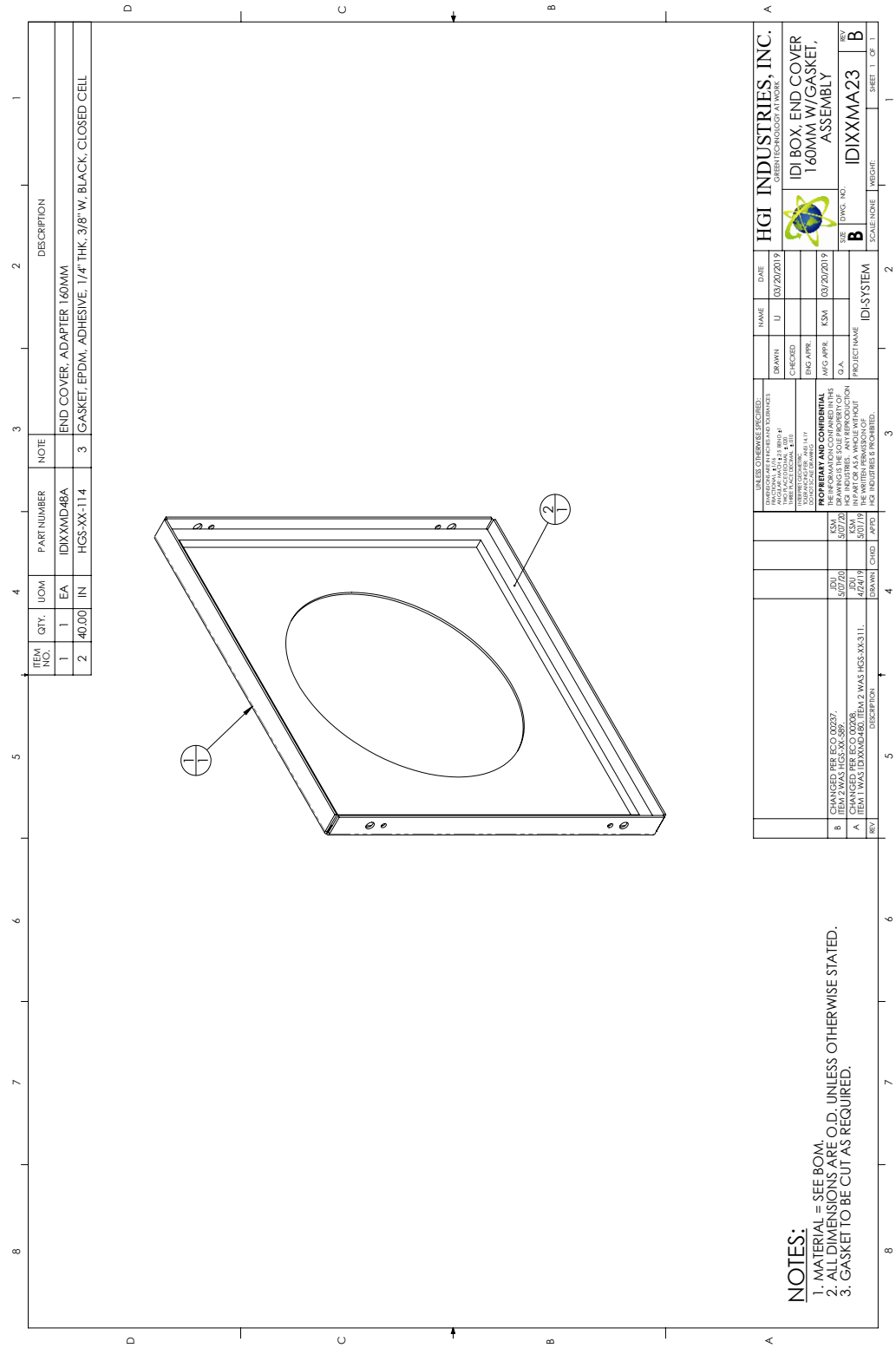

© 2023 The Pyure Company Inc.

19.9 Appendix D: Six Unit Controller Schematic (General) [MVPXXED25]

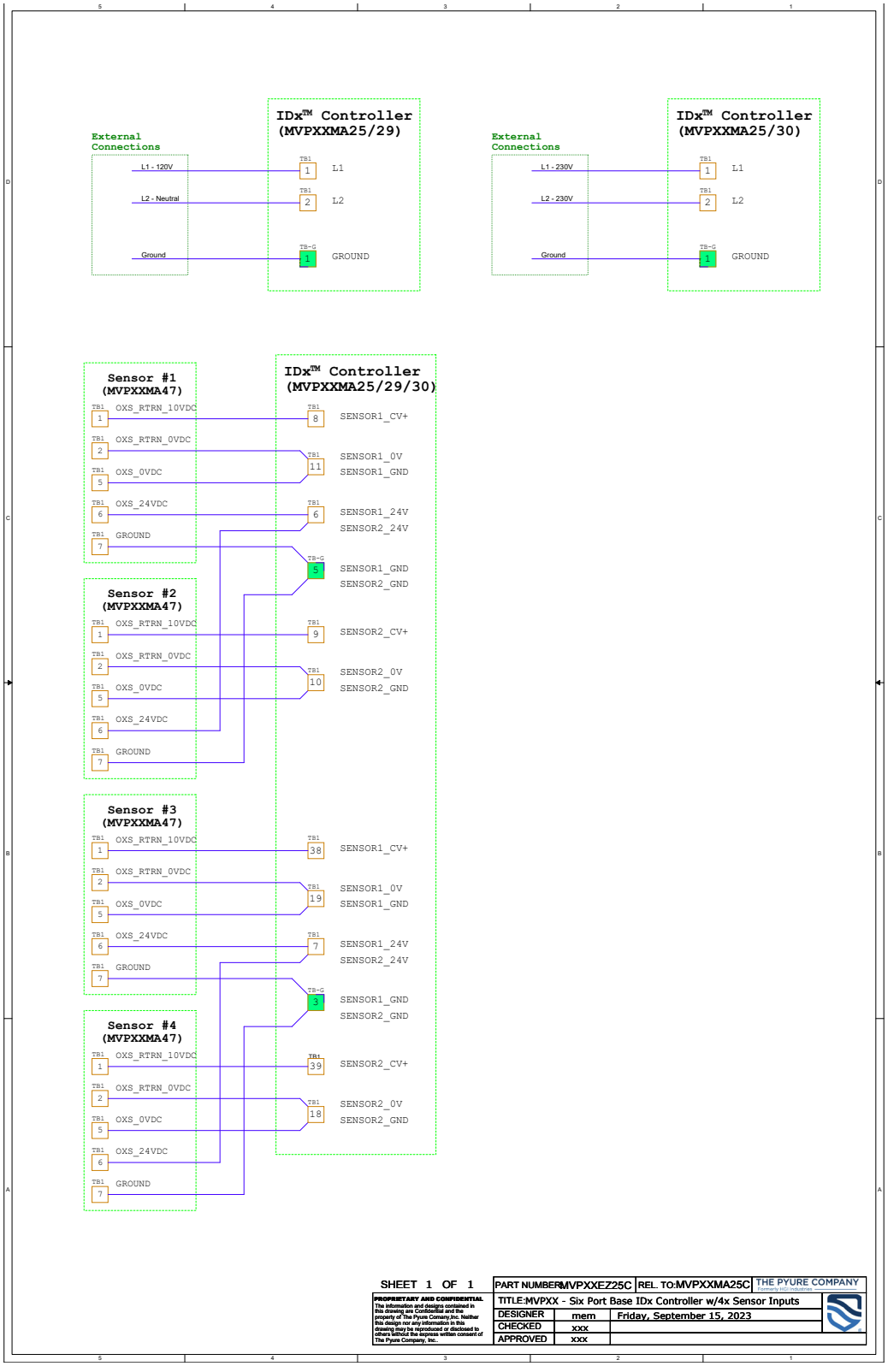

© 2023 The Pyure Company Inc.

19.10 Appendix D: Six Unit Controller One IDI03™ Unit Schematic [MVPXXEZ100]

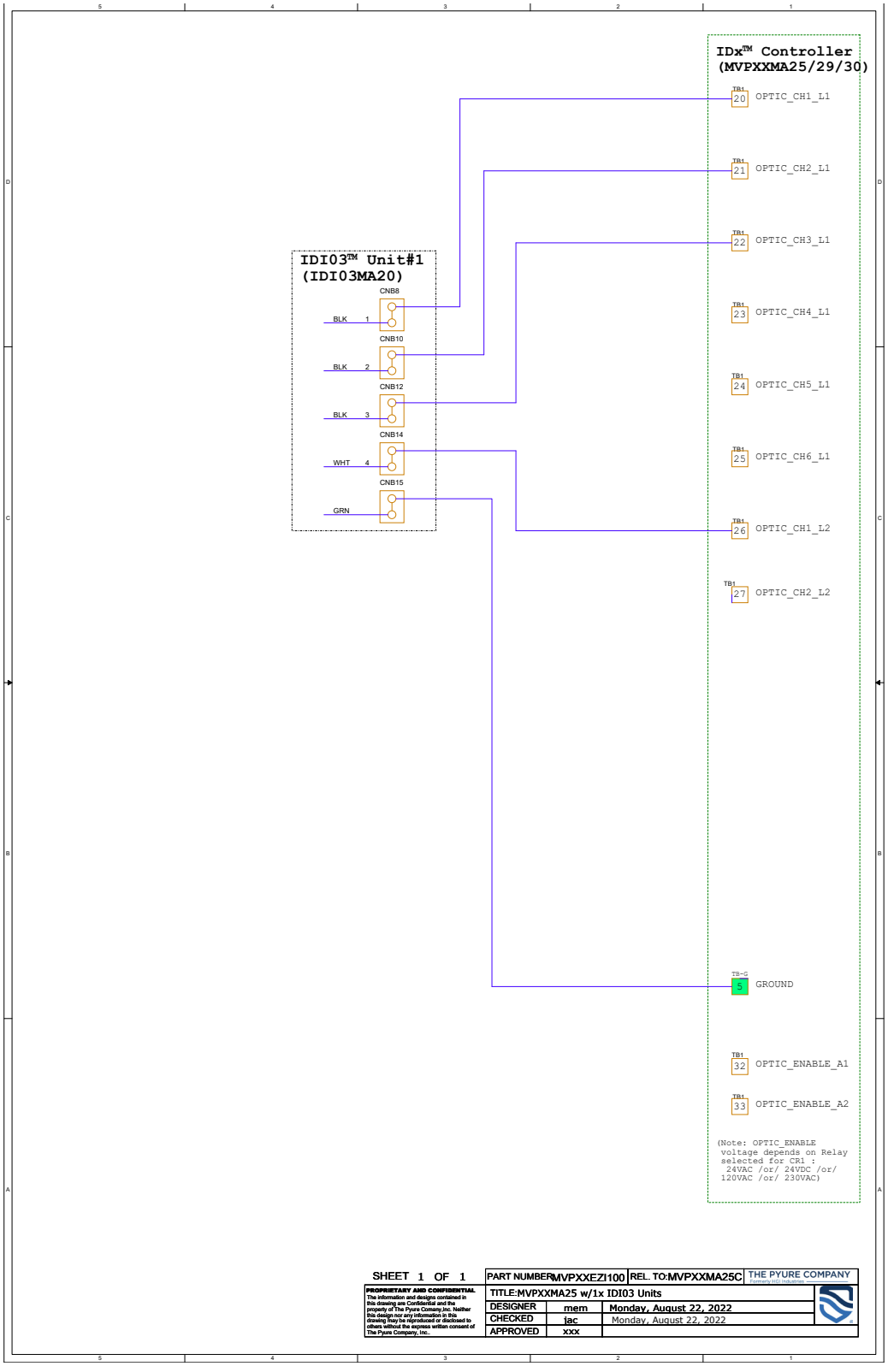

© 2023 The Pyure Company Inc.

19.11 Appendix D: Six Unit Controller Two IDI03™ Unit Schematic [MVPXXEZ200]

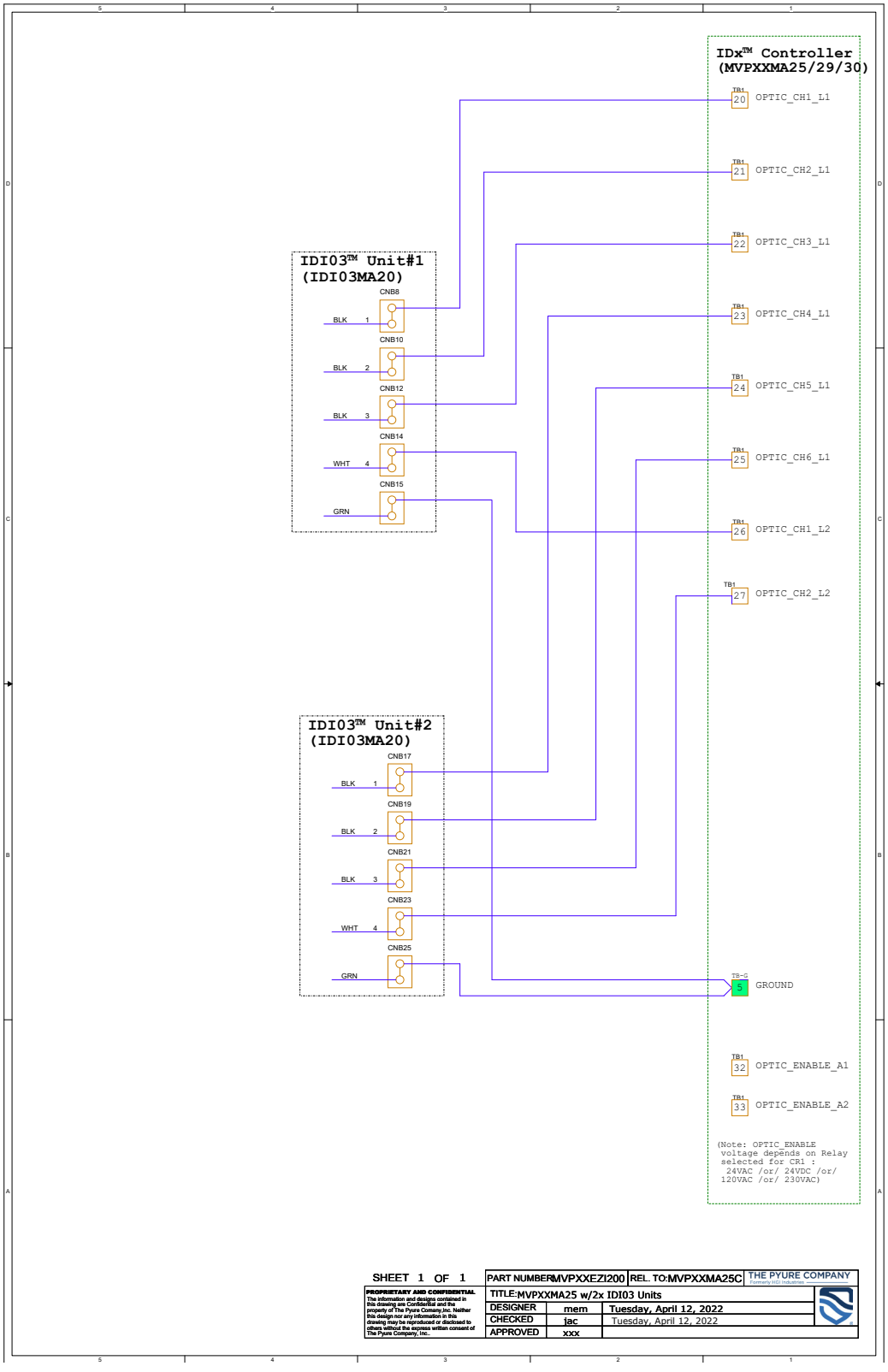

© 2023 The Pyure Company Inc.

19.12 Appendix D: Six Unit Controller Three IDI03™ Unit Schematic [MVPXXEZ300]

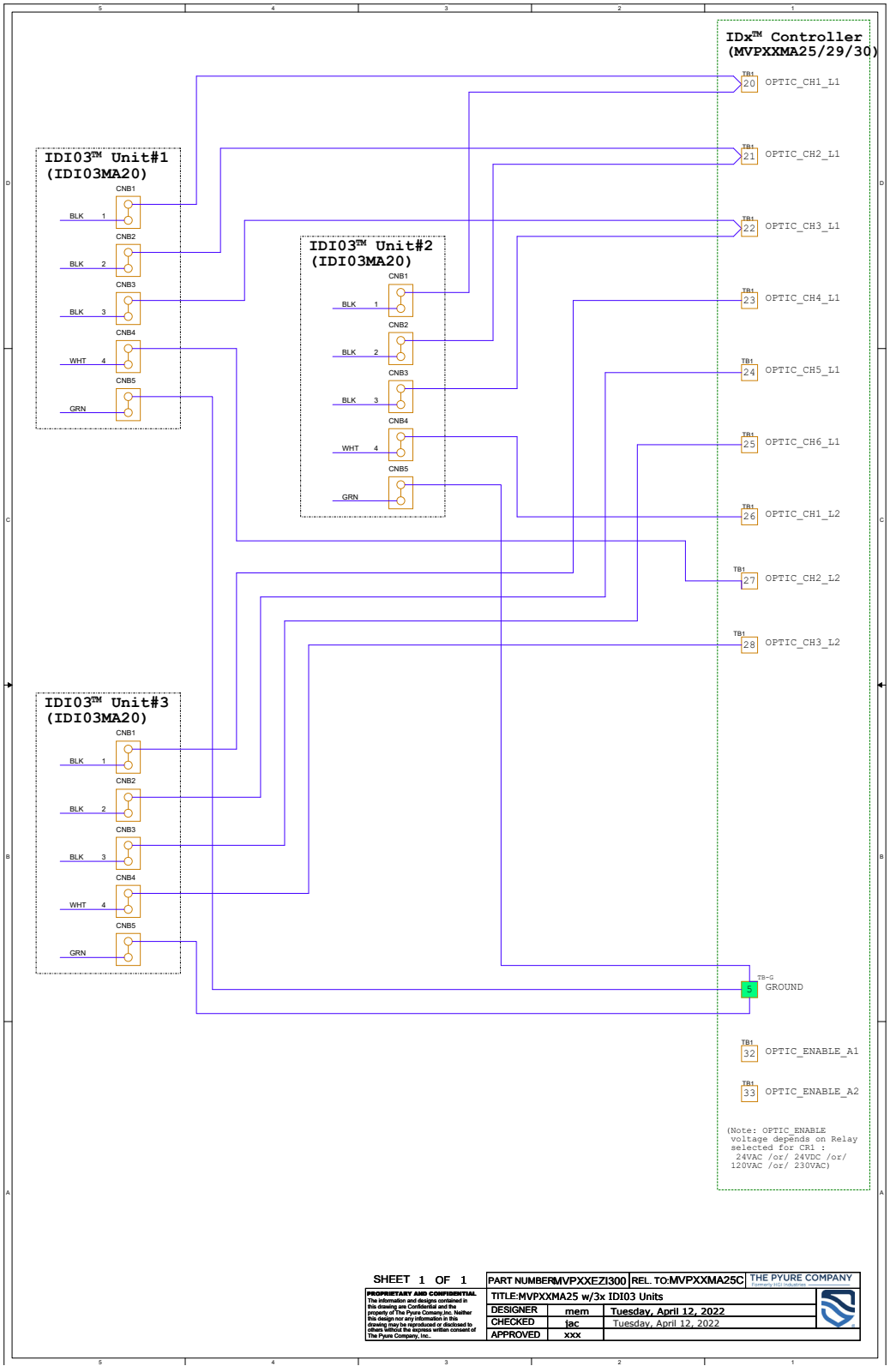

© 2023 The Pyure Company Inc.

19.13 Appendix D: Six Unit Controller Four IDI03™ Unit Schematic [MVPXXEZ400]

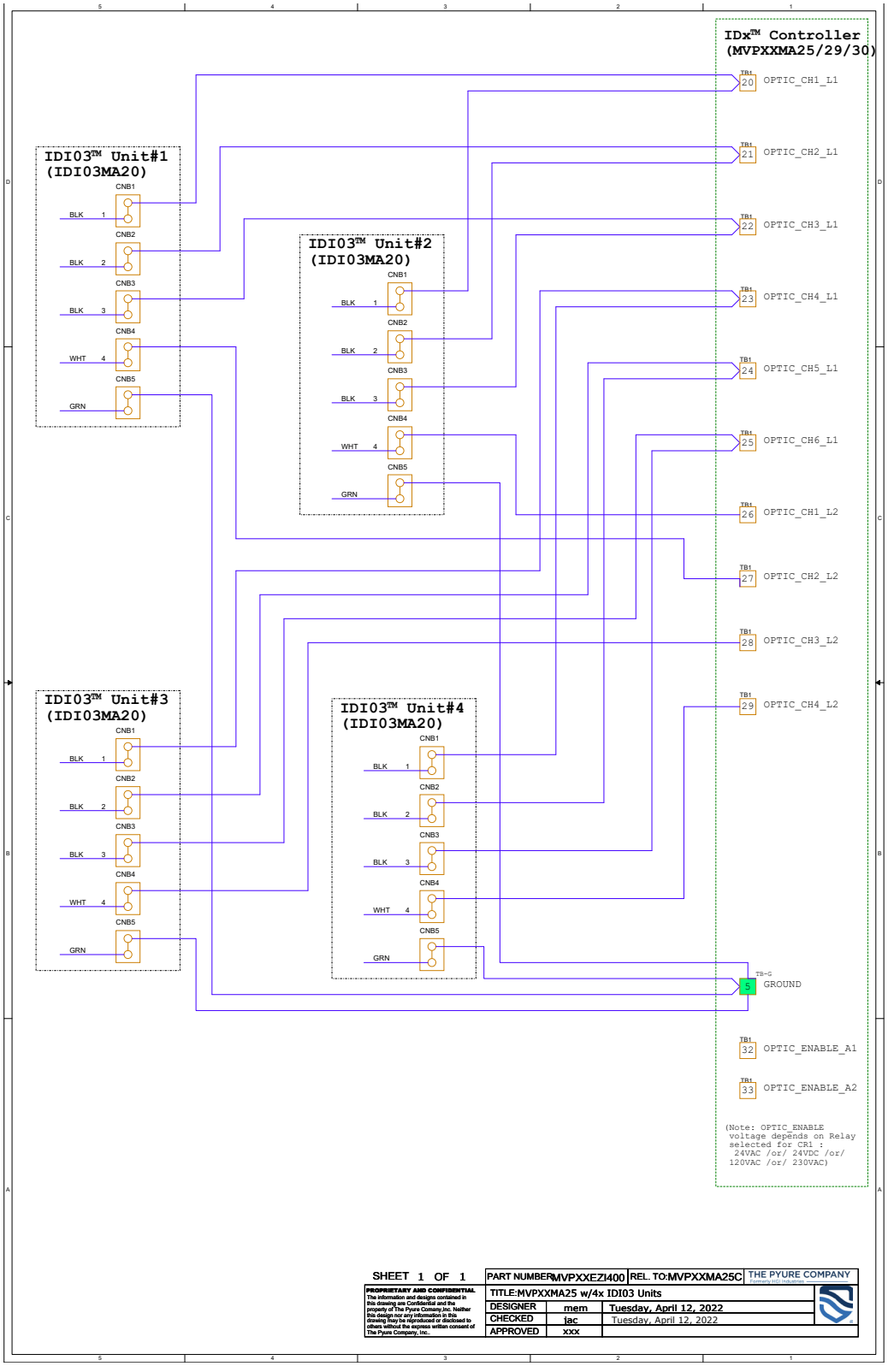

© 2023 The Pyure Company Inc.

19.14 Appendix D: Six Unit Controller w/Two Sensors Schematic [MVPXXEZS20]

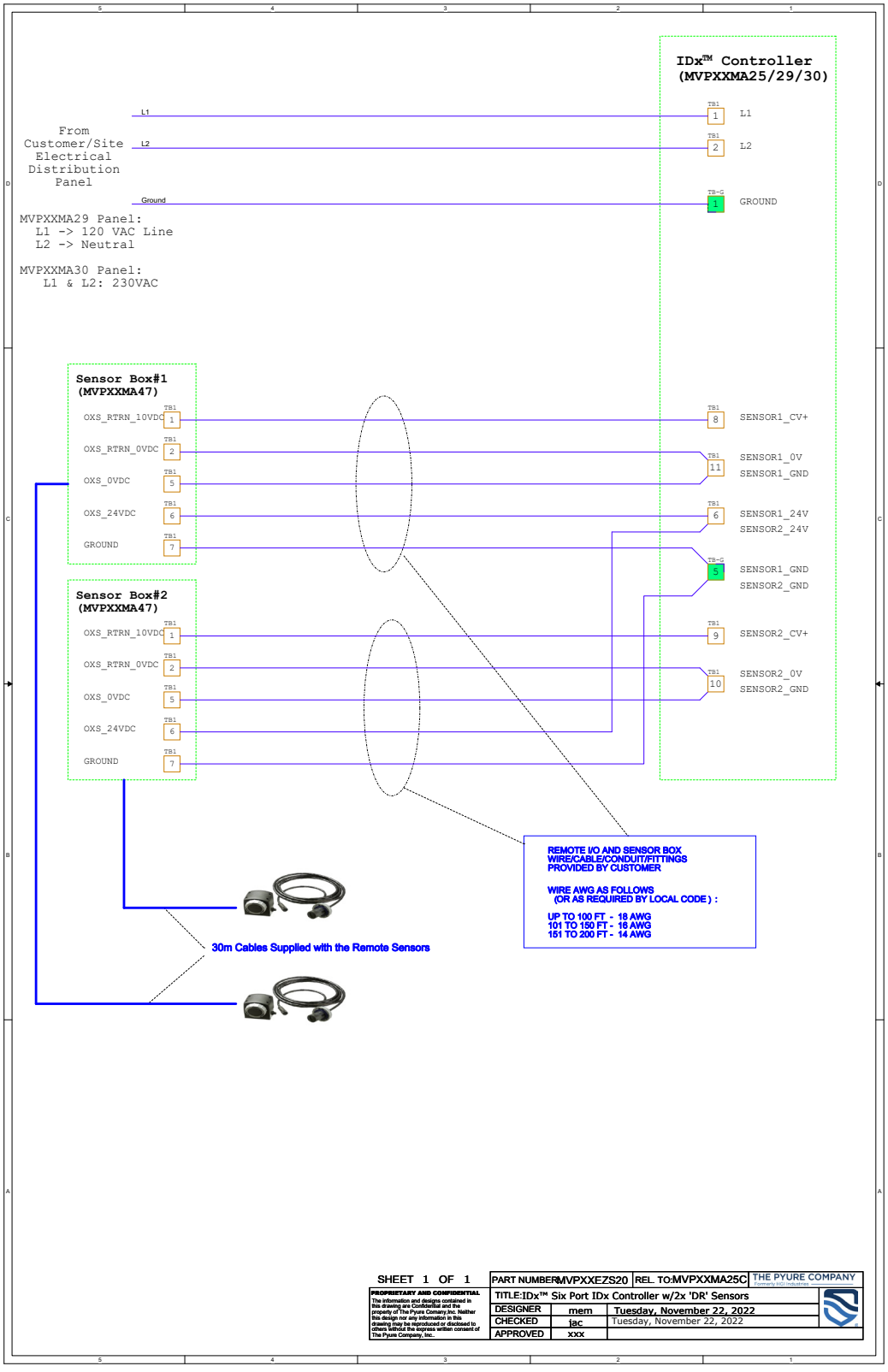

© 2023 The Pyure Company Inc.

19.15 Appendix D: Six Unit Controller (230V)w/Four Sensors Schematic [MVPXXEZS30]

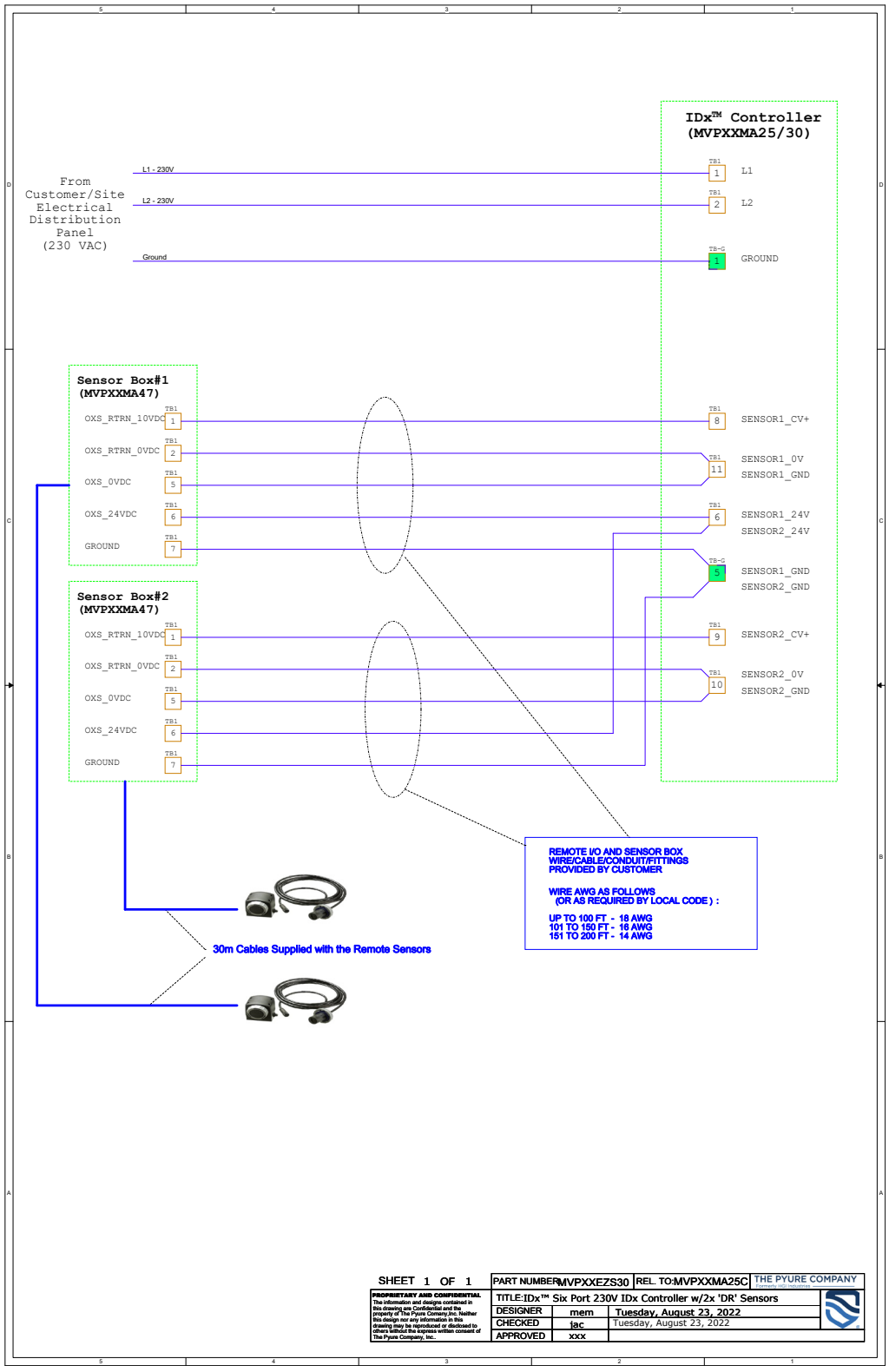

© 2023 The Pyure Company Inc.

19.16 Appendix D: Six Unit Controller w/Four Sensors Schematic [MVPXXEZS24]

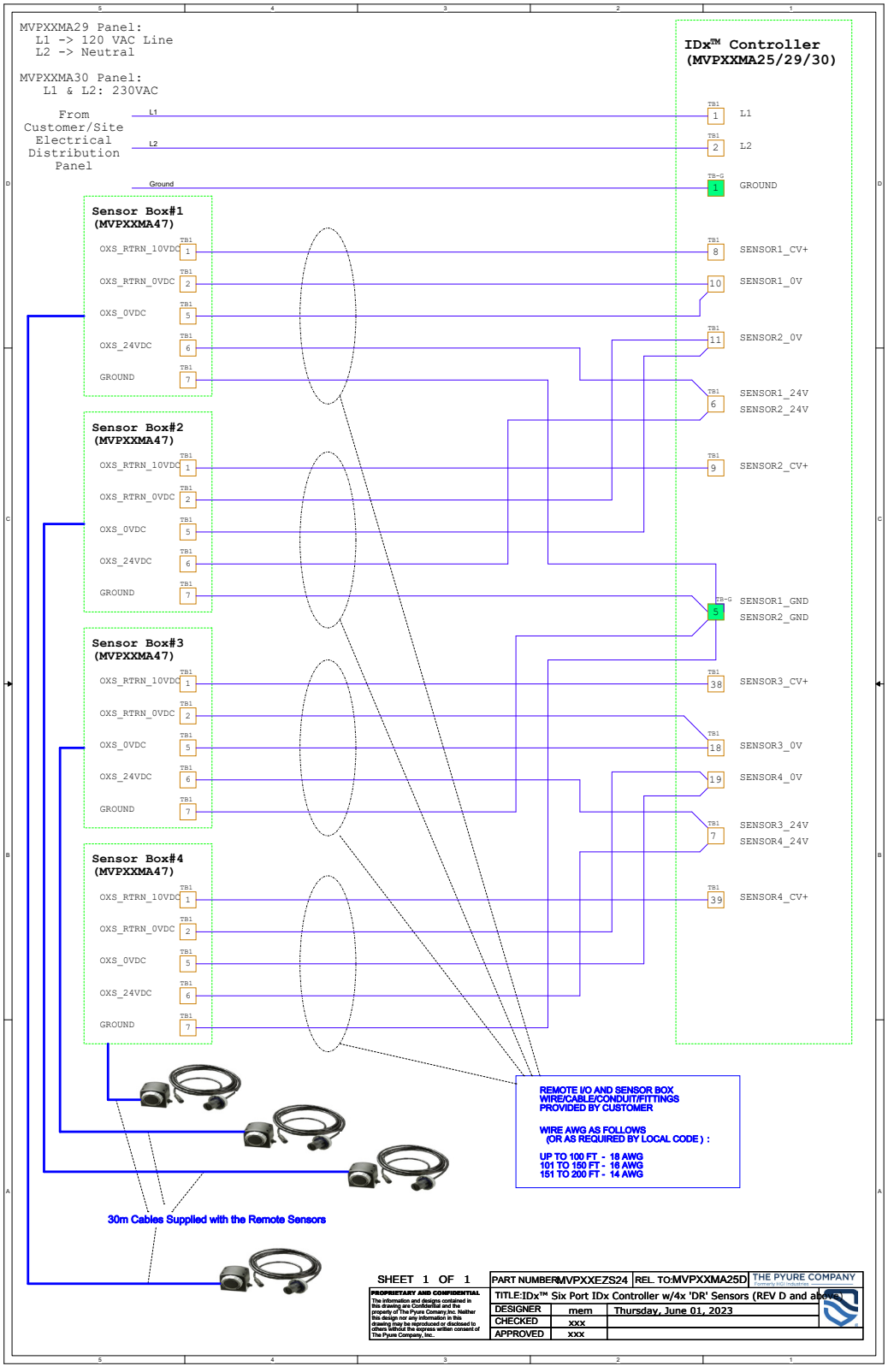

© 2023 The Pyure Company Inc.

20. Appendix E - Sixteen Port Controller: Technical Documents

20.1 Appendix E: Sixteen Port Controller (120V) [MVPXXMA370]

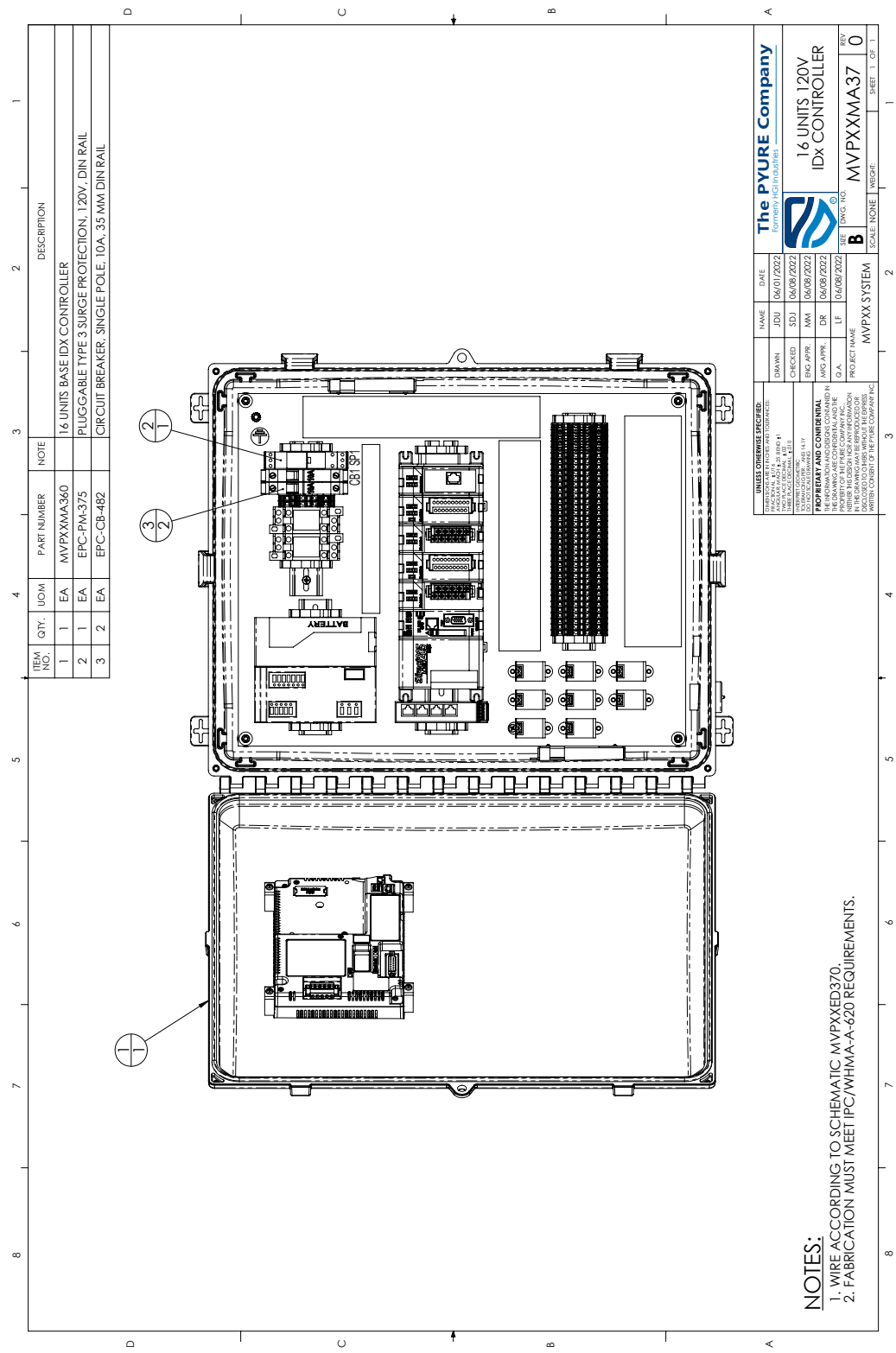

20.2 Appendix E: Sixteen Port Controller (230V) [MVPXXMA380]

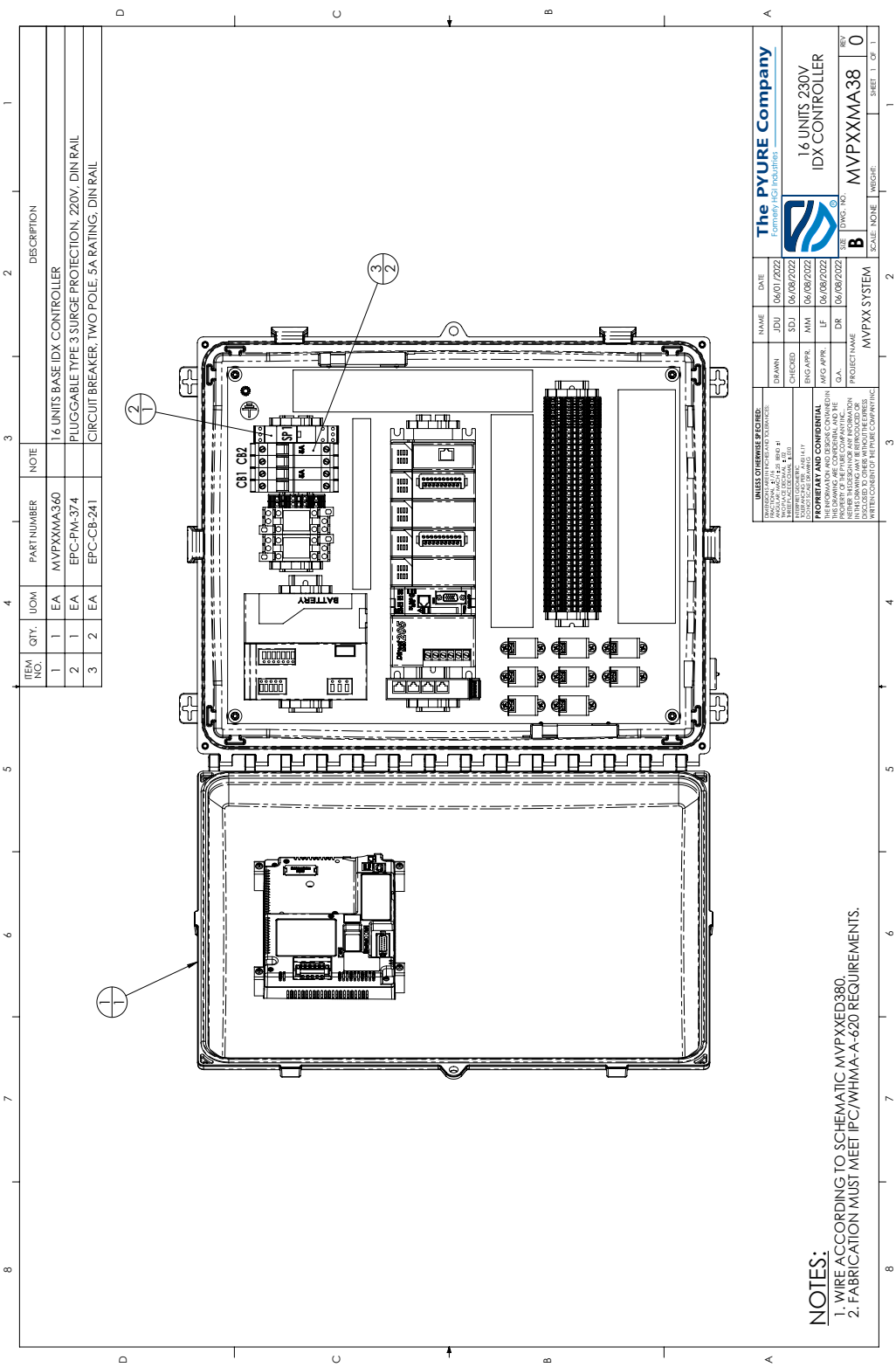

© 2023 The Pyure Company Inc.

20.3 Appendix E: Sixteen Port Controller Five IDI03™ Unit Schematic [MVPXXEZJ500]

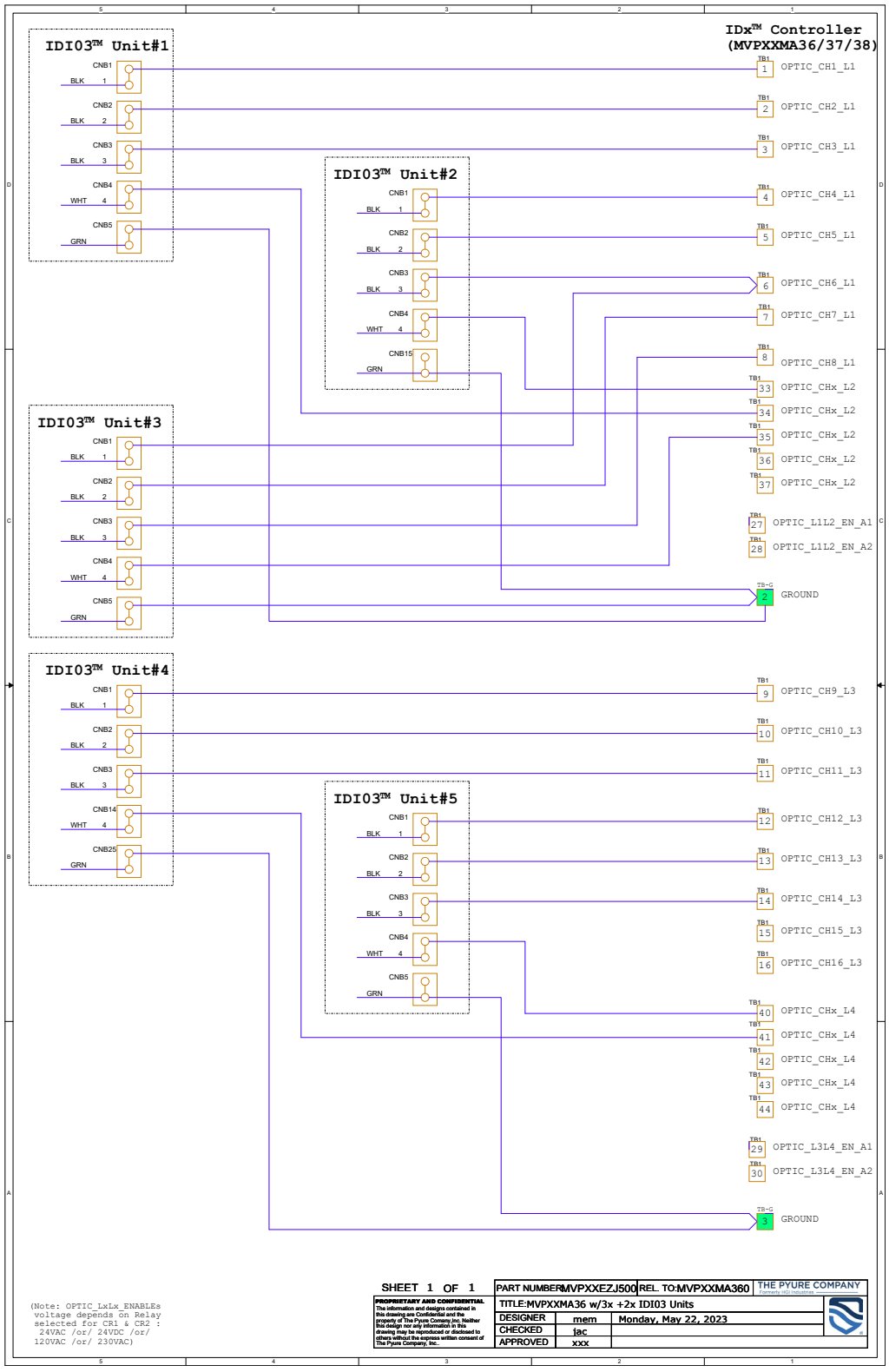

© 2023 The Pyure Company Inc.

20.4 Appendix E: Sixteen Port Controller Seven IDI03™ Unit Schematic [MVPXXEZJ700]

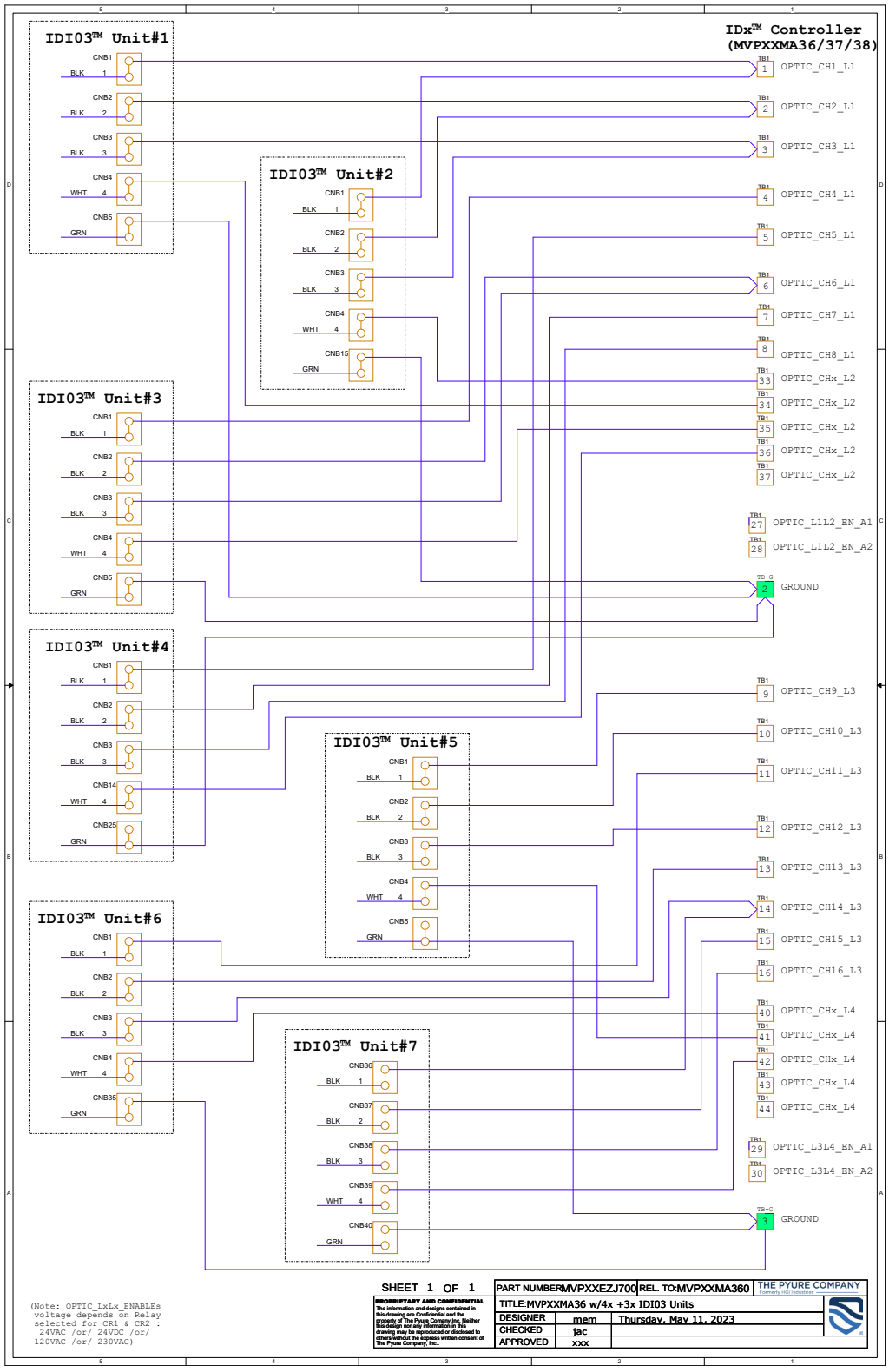

© 2023 The Pyure Company Inc.

20.5 Appendix E: Sixteen Port Controller Eight IDI03™ Unit Schematic [MVPXXEZJ100]

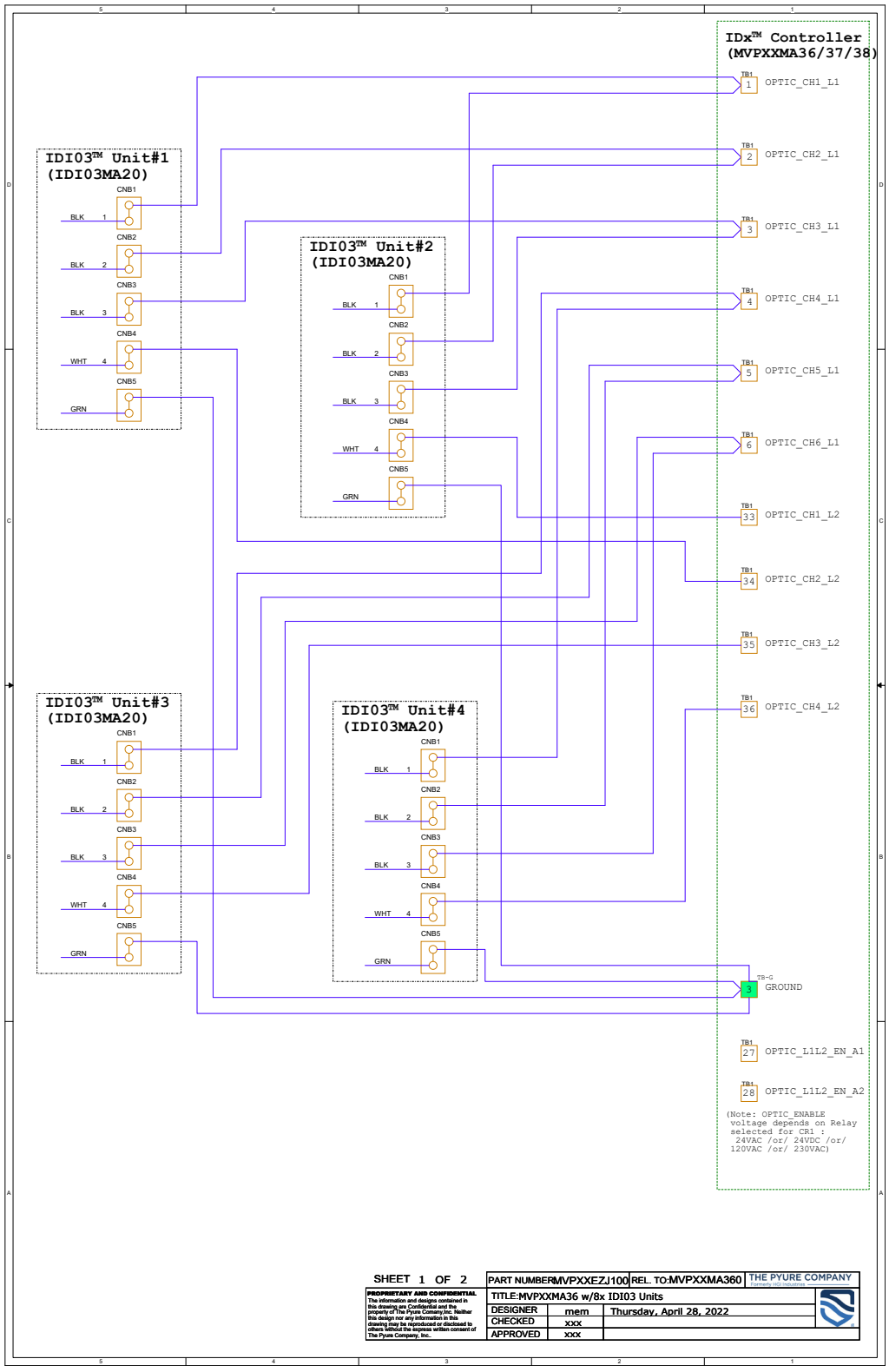

© 2023 The Pyure Company Inc.

20.5 Appendix E: Sixteen Port Controller Eight IDI03™ Unit Schematic (cont) [MVPXXEZJ100]

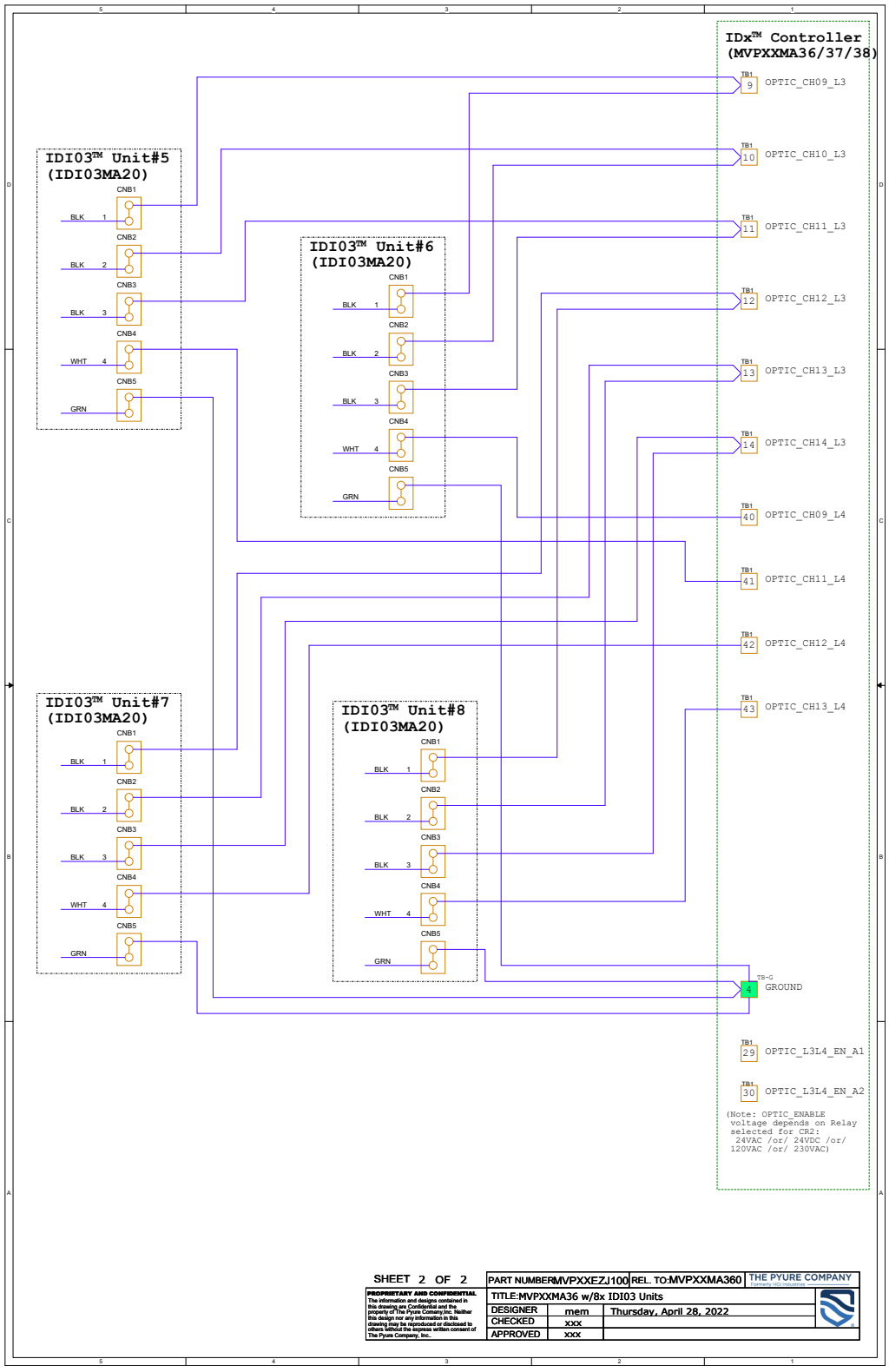

© 2023 The Pyure Company Inc.

20.6 Appendix E: Sixteen Port Controller (120V & 230V) w/Four Sensors Schematic [MVPXXEZS22]

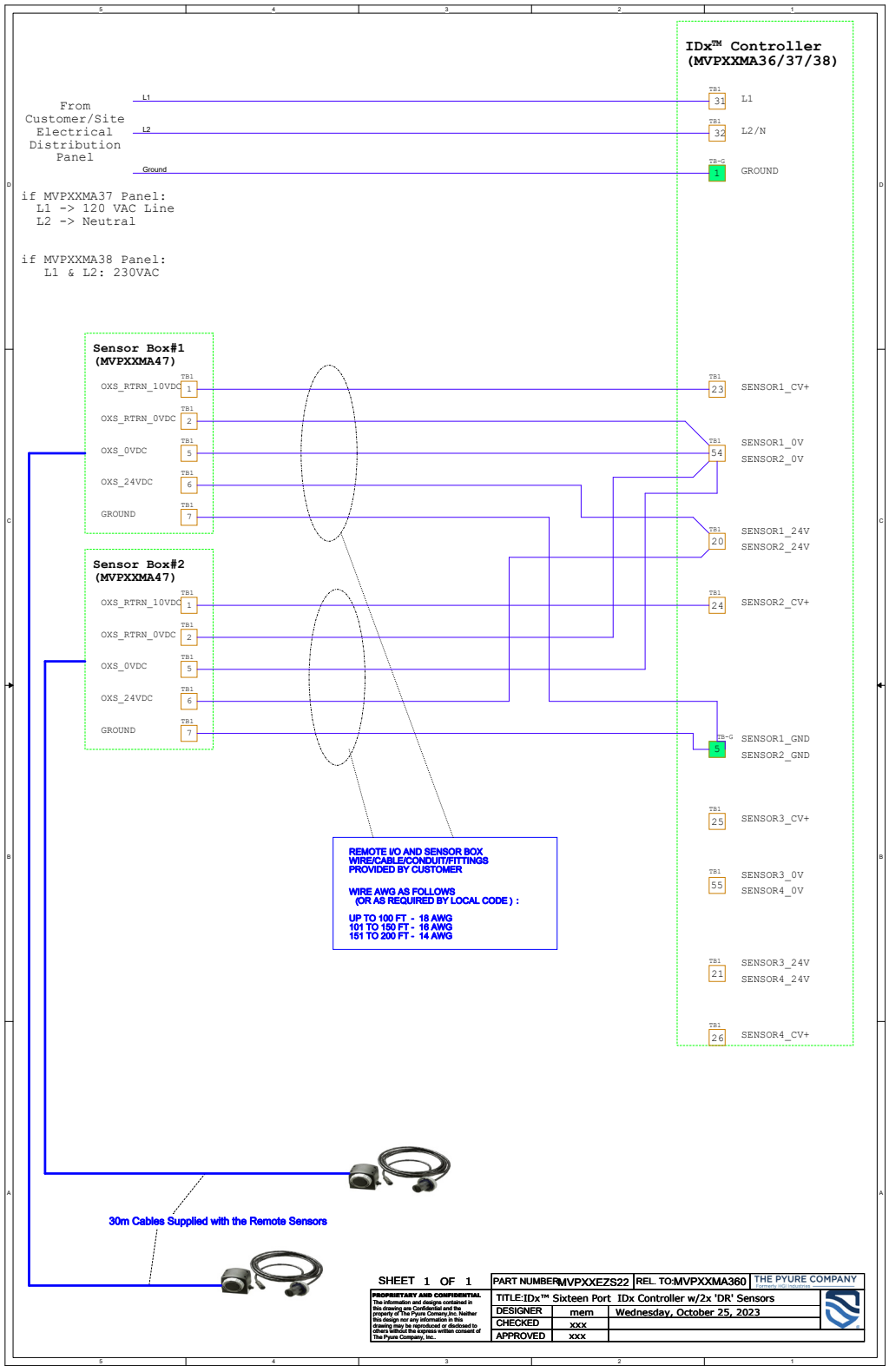

© 2023 The Pyure Company Inc.

20.7 Appendix E: Sixteen Port Controller (120V & 230V) w/Four Sensors Schematic [MVPXXESZ40]

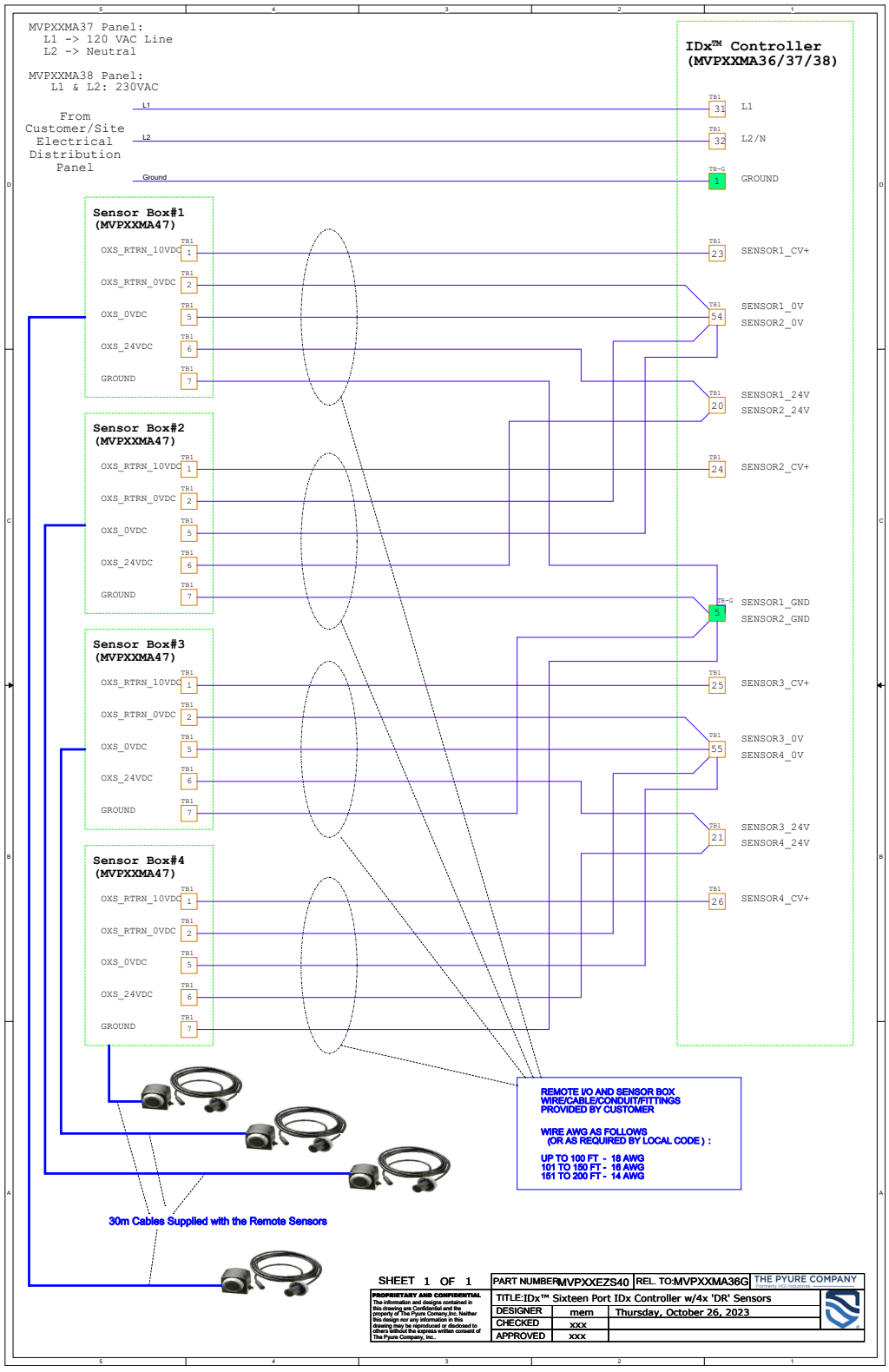

© 2023 The Pyure Company Inc.

21. Appendix F – Limited Warranty

Limited Warranty

The Pyure Company (“Pyure”), Incorporated, warrants that this Pyure product(s) (excluding spare parts and consumables) shall be free from defects in workmanship or materials for a period of two (2) years from the date of shipment from Pyure. Visit www.pyure.com/warranty-registration to complete and register your warranty online.

The Pyure Company (“Pyure”) warrants that the product(s) will be free from defects in materials and workmanship for the period of two (2) years from the date of shipment from Pyure (or at Pyure’s sole option) under the following terms and conditions:

To obtain service under this warranty, contact any Pyure regional office, or Pyure authorized warranty service center. If requested by Pyure or a Pyure authorized service center, you must present proof of purchase showing the date and place of purchase. If upon inspection by Pyure or an Pyure authorized warranty service center, the product is proved to be defective, it will be repaired without charge using, if necessary, new parts or comparable used parts that have been fully reconditioned and returned to you. The warranty period for replacement parts shall extend for a period of six (6) months following the installation of same or for the remaining period of this warranty whichever is longer. This warranty does not apply in the following cases: (a) damage to product due to mishandling, alteration, failure to follow operation, maintenance or environmental instructions prescribed by applicable instruction manual or shipping damage; (b) damage caused during service performed other than Pyure or an Pyure authorized service center; (c) if the product has had its serial number(s) or other identifying data removed: or (d) damage, defect or unsatisfactory performance caused by the use of equipment not manufactured or distributed by Pyure. IN NO EVENT WILL PYURE BE LIABLE FOR ANY DAMAGE, INCLUDING INCONVENIENCE, LOST PROFITS, OR LOST SAVINGS, OTHER INCIDENTAL DAMAGE STEMMING FROM THE USE OF THE PRODUCT OR OUT OF DEFECTS THEREIN, OR BY BREACH OF THIS EXPRESSED WARRANTY OR ANY IMPLIED WARRANTY WITH THE RESPECT OF THIS PRODUCT, WHETHER ON ACCOUNT OF NEGLIGENCE OR OTHERWISE, EVEN IF PYURE OR AN PYURE AUTHORIZED WARRANTY SERVICE CENTER HAS BEEN ADVISED OF THE POSSIBLITY OF SUCH DAMAGES.

Some states or provinces do not allow limitations on how long an implied warranty lasts or limitations of incidental or consequential damages, so the above limitations may not apply to you. This warranty gives you specific legal rights and you may also have other rights which vary from state to state or province to province.

© 2023 The Pyure Company Inc.

22. Appendix G – Limited Use End-User License Agreement

Limited Use End-User License Agreement

This End-User License Agreement (EULA) is a legal agreement between you (either an individual or a single entity) and the mentioned owner (The Pyure Company) of any computer software which may include associated firmware, media, printed materials, and "online" or electronic documentation ("Licensed Pyure Software").

By installing, copying, or otherwise using the Licensed Pyure Software, you agree to be bounded by the terms of this EULA. If you do not agree to the terms of this EULA, do not install or use the Licensed Pyure Software in the Pyure product.

Licensed Pyure Software.

The Licensed Pyure Software is protected by U.S. and international copyright, patent, trade secret laws and well as other international intellectual property laws and treaties. Upon your acceptance of this EULA, The Pyure Company grants to you a nonexclusive, revocable license to use the Licensed Pyure Software, provided that you agree to the following:

1. Grant of License.

The Licensed Pyure Software is licensed, not sold. You own a copy of any media or hardware on which the Licensed Pyure Software is shipped, but not a copy of the Licensed Pyure Software itself. The Pyure Company retains all title, copyrights, and other intellectual property rights in the Licensed Pyure Software and any copies thereof. You may use a copy of the Licensed Pyure Software with any Pyure product for which you have accepted the terms of this EULA.

2. Restrictions.

You must maintain all notices including copyrights on all copies of the Licensed Pyure Software. You may not modify, adapt, translate, reverse engineer, decompile, disassemble, or otherwise attempt to learn the source code of the Licensed Pyure Software, except and only to the extent that such activity is expressly permitted by applicable law notwithstanding this limitation.

3. Termination.

Your rights under this EULA terminate upon your termination of this EULA, or without prejudice to any other rights, The Pyure Company may terminate this EULA if you fail to comply with its terms and conditions. In such event, you must destroy all copies of the Licensed Pyure Software.

4. No Software Warranty Independent from Other Warranties.

The Licensed Pyure Software is being delivered to you "AS IS" and The Pyure Company makes no warranty as to its use or performance, other than any the "Limited Warranty" on the Pyure product described above.

5. LIMITATION OF LIABILITY.

TO THE MAXIMUM EXTENT PERMITTED BY APPLICABLE LAW, IN NO EVENT SHALL THE PYURE COMPANY OR ITS SUPPLIERS BE LIABLE FOR ANY SPECIAL, INCIDENTAL, INDIRECT, OR CONSEQUENTIAL DAMAGES OR ANY DAMAGES WHATSOEVER (INCLUDING, WITHOUT LIMITATION, DAMAGES FOR LOSS OF BUSINESS PROFITS, BUSINESS INTERRUPTION, LOSS OF BUSINESS INFORMATION, LOSS OF SAVINGS, OR ANY OTHER PECUNIARY LOSS) ARISING OUT OF THE USE OF OR INABILITY TO USE THE LICENSED PYURE SOFTWARE PRODUCT, OR FOR PROVISION OF OR FAILURE TO PROVIDE SUPPORT SERVICES, EVEN IF THE PYURE COMPANY HAS BEEN ADVISED OF THE POSSIBILITY OF SUCH DAMAGES.

THE ENTIRE LIABILITY OF THE PYURE COMPANY AND YOUR EXCLUSIVE REMEDY UNDER THIS EULA IS, AT THE OPTION OF THE PYURE COMPANY, CORRECTING OR WORKING AROUND ERRORS, REPLACING THE MEDIA, OR REFUNDING THE PURCHASE PRICE. IN NO EVENT SHALL THE PYURE COMPANY'S ENTIRE LIABILITY UNDER THIS EULA EXCEED THE PURCHASE PRICE (EVEN IF THE LICENSED PYURE SOFTWARE PRODUCT IS DOWNLOADED WITH OTHER THIRD PARTY SOFTWARE FREE OF CHARGE) OF THE LICENSED PYURE SOFTWARE PRODUCT.

6. Miscellaneous.

This EULA is governed by the laws of the State of Florida, U.S.A., and jurisdiction for any action based on the Licensed Pyure Software shall lie in a court located in Palm Beach County Florida. If any part of this EULA is found void and unenforceable, it will not affect the validity of the balance of the EULA, which shall remain valid and enforceable according to its terms. Should you have any questions concerning this EULA, or if you desire to contact The Pyure Company for any reason, please visit: www.pyure.com/contact.

© 2023 The Pyure Company Inc.